KiliManjaro 2.0

(Montevina DDR3)

Pre-MV Build 2008.06.19

DATE	CHANGE NO.	REV

	EE	DATE	POWER	DATE
DRAWER				
DESIGN				
CHECK				
RESPONSIBLE				

SIZE = 3 VER :

FILE NAME : XXXX-XXXXXX-XX

P/N XXXXXXXXXXXX

INVENTEC

TITLE *KiliManjaro 2.0(Montevina)*

SIZE	CODE	DOC. NUMBER	REV
A3	CS	*1310A2207301-0-MP02*	*F02*

SHEET 1 OF 58

TABLE OF CONTENTS

PAGE	PAGE	PAGE
MAINBOARD		SMALL BOARD
1.COVER PAGE	39.CARD READER	53.IO BOARD(TV Tuner or Robson)
2.INDEX	40.LAN CONTROLLER	54. USB & TV BOARD
3.BLOCK DIAGRAM	41.RJ45 & TRANSFORMER	55. PWR JACK LED BOARD
4.POWER SEQUENCE BLOCK	42.MINI CARD CONN	56. PWR BUTTON & LID BOARD
5-12.SYSTEM POWER	43.ODD & HDD CONN	57.E-KEY BOARD
13.CLOCK GENERATOR	44.USB CONN/ESATA	58.TH-BUTTON BOARD
14-17.CPU Penryn	45.BT & LED & CIR & SW	59.HOTKEY BOARD
18.FAN & THERMAL CONTROLLER	46.KBC	
19-25.N/B Cantiga	47.CODEC	
26.DDR2 DIMM0	48-49.AUDIO AMP&JACK	
27.DDR2 DIMM1	50.MDC	
28.DDR DAMPING	51.SCREW & EMI	
29.MXM CONN	52.TO OTHER BOARD CONN	
30.CRT CONN		
31.HDMI CONN		
32.LCD CONN		
33-37.S/B ICH9		
38.EXPRESS CARD		

WWW.AliSaler.Com

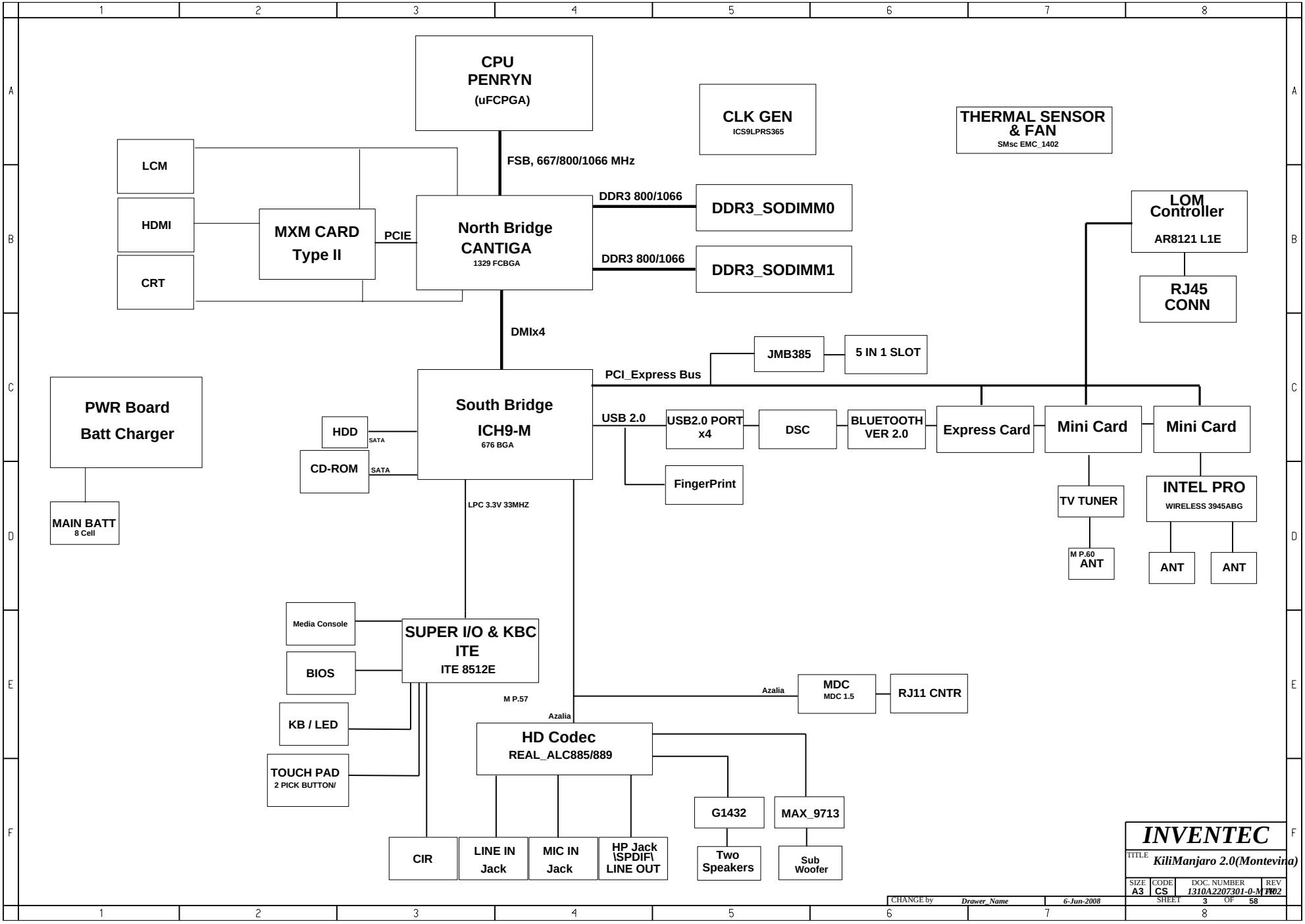

INVENTEC

TITLE KiliManjaro 2.0(Montevina)

SIZE	CODE	DOC. NUMBER	REV
A3	CS	1310A2207301-0-M1-02	1.0

SHEET 3 OF 58

CHANGE by Drawer_Name 6-Jun-2008

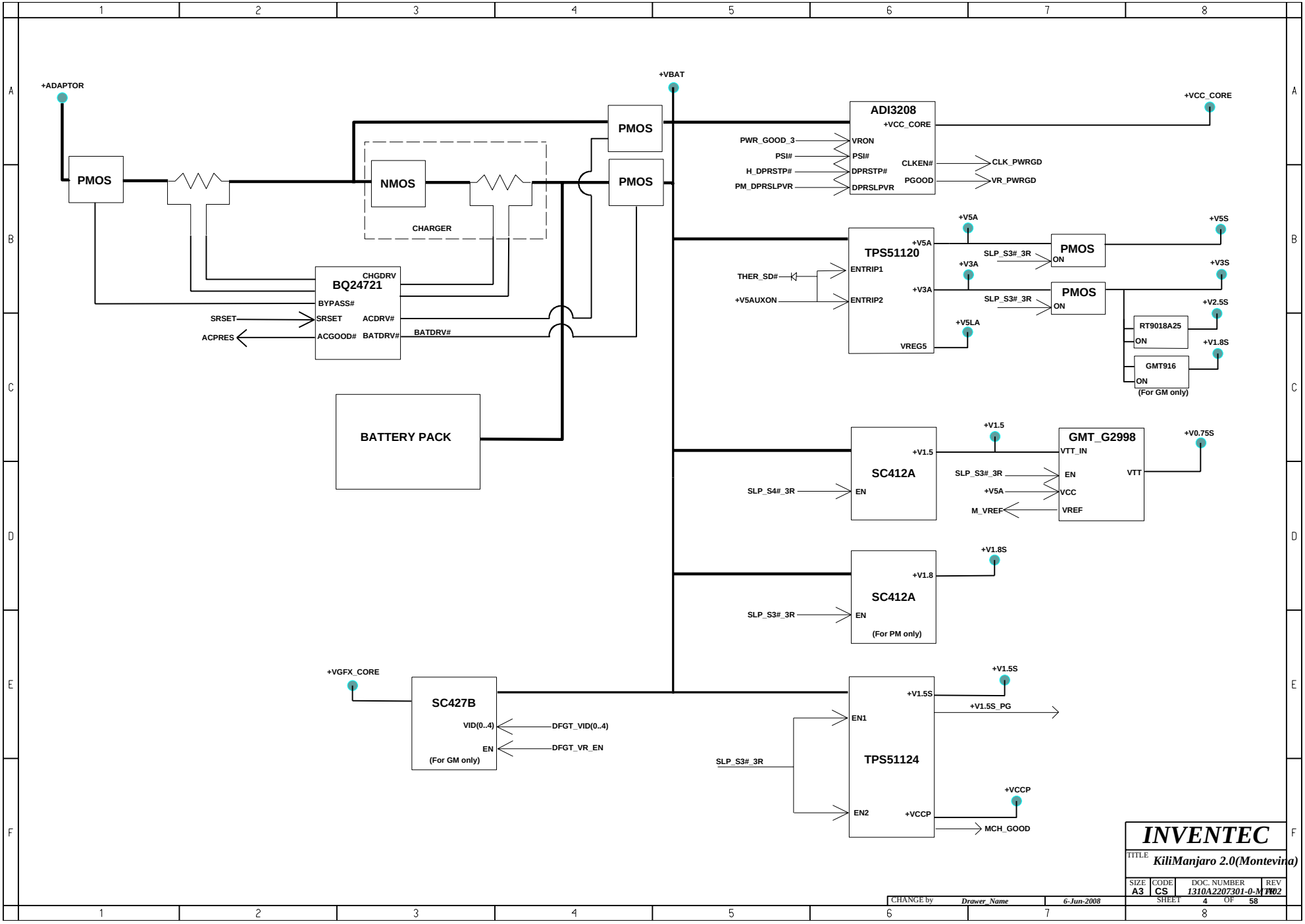

WWW.AliSaler.Com

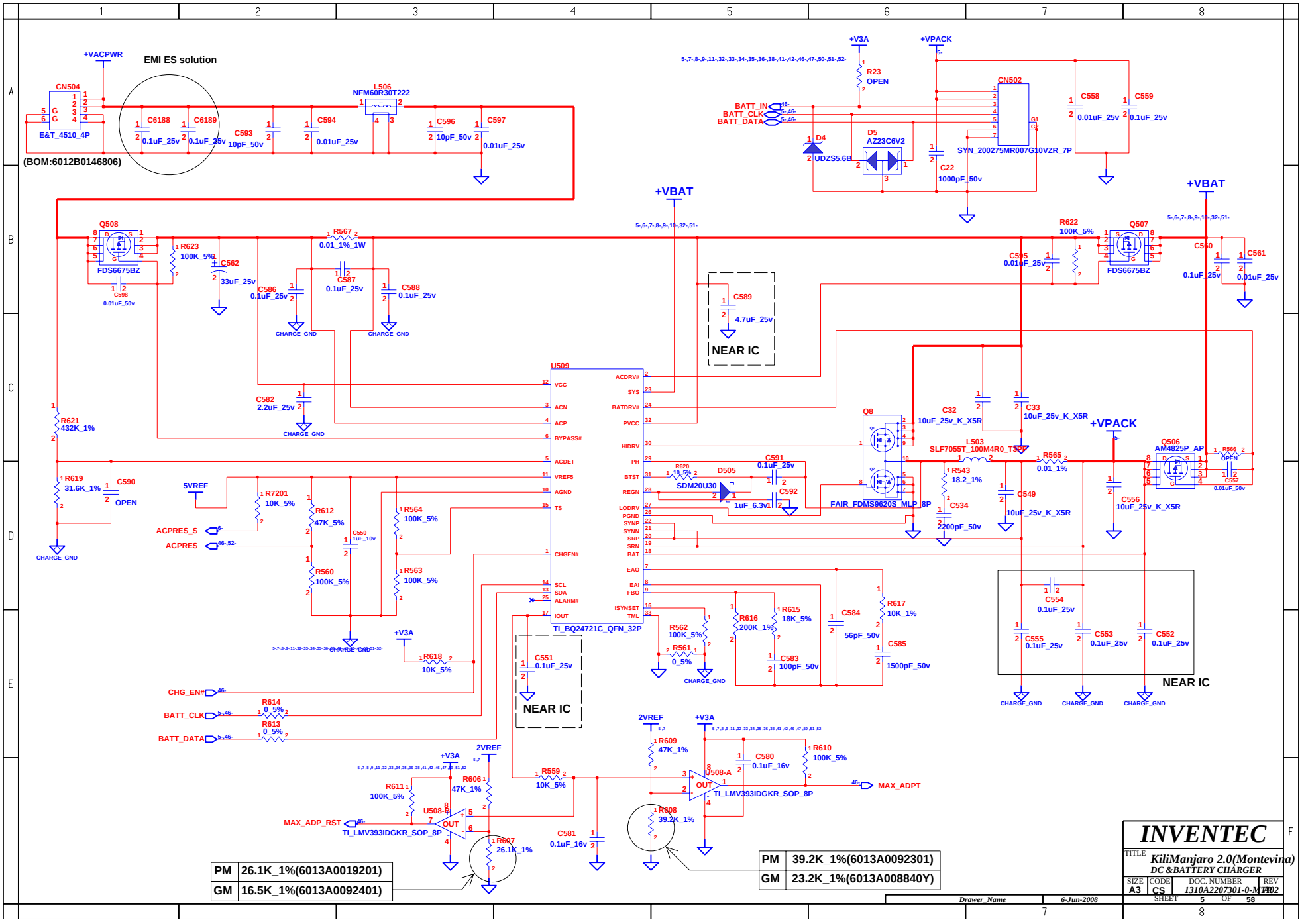
EMI ES solution
+VACPWR
CN504
E&T_4510_4P
(BOM:6012B0146806)
C6188 0.1uF_25v
C6189 0.1uF_25v
C593 10pF_50v
L506 NFM60R30T222
C594 0.01uF_25v
C596 10pF_50v
C597 0.01uF_25v
+V3A
R23 OPEN
+VPACK
CN502
SYN_200275MR007G10VZR_7P
BATT_IN
BATT_CLK
BATT_DATA
D4 UDZS5.6B
D5 AZ23C6V2
C22 1000pF_50v
C558 0.01uF_25v
C559 0.1uF_25v
+VBAT
Q508 FDS6675BZ
R623 100K_5%
C562 33uF_25v
R567 0.01_1%_1W
C587 0.1uF_25v
C586 0.1uF_25v
C588 0.1uF_25v
C598 0.01uF_50v
CHARGE_GND
R622 100K_5%
Q507 FDS6675BZ
C595 0.01uF_25v
C560 0.1uF_25v
C561 0.01uF_25v
C589 4.7uF_25v
NEAR IC
U509
TI_BQ24721C_QFN_32P
ACDRV#
SYS
BATDRV#
PVCC
VCC
ACN
ACP
BYPASS#
ACDET
VREF5
AGND
TS
CHGEN#
SCL
SDA
ALARM#
IOUT
HIDRV
PH
BTST
REGN
LODRV
PGND
SYNP
SYNN
SRP
SRN
BAT
EAO
EAI
FBO
ISYNSET
TML
C582 2.2uF_25v
R621 432K_1%
R619 31.6K_1%
C590 OPEN
5VREF
R7201 10K_5%
R612 47K_5%
R560 100K_5%
C550 1uF_10v
R564 100K_5%
R563 100K_5%
ACPRES_S
ACPRES
R618 10K_5%
CHG_EN#
BATT_CLK
BATT_DATA
R614 0_5%
R613 0_5%
C551 0.1uF_25v
R620 10_5%
D505 SDM20U30
C591 0.1uF_25v
C592 1uF_6.3v
Q8 FAIR_FDMS9620S_MLP_8P
C32 10uF_25v_K_X5R
C33 10uF_25v_K_X5R
L503 SLF7055T_100M4R0_TS
R543 18.2_1%
C534 2200pF_50v
R565 0.01_1%
C549 10uF_25v_K_X5R
Q506 AM4825P_AP
R566 OPEN
C557 0.01uF_50v
C556 10uF_25v_K_X5R
C554 0.1uF_25v
C555 0.1uF_25v
C553 0.1uF_25v
C552 0.1uF_25v
R562 100K_5%
R561 0_5%
R616 200K_1%
R615 18K_5%
C583 100pF_50v
C584 56pF_50v
R617 10K_1%
C585 1500pF_50v
2VREF
R609 47K_1%
R610 100K_5%
C580 0.1uF_16v
U508-A
TI_LMV393IDGKR_SOP_8P
MAX_ADPT
R559 10K_5%
R606 47K_1%
R611 100K_5%
U508-B
MAX_ADP_RST
R607 26.1K_1%
C581 0.1uF_16v
R608 39.2K_1%
PM 26.1K_1%(6013A0019201)
GM 16.5K_1%(6013A0092401)
PM 39.2K_1%(6013A0092301)
GM 23.2K_1%(6013A008840Y)
INVENTEC
TITLE KiliManjaro 2.0(Montevina)
DC &BATTERY CHARGER
SIZE A3
CODE CS
DOC. NUMBER 1310A2207301-0-M/B
REV 1.02
Drawer_Name
6-Jun-2008
SHEET 5 OF 58

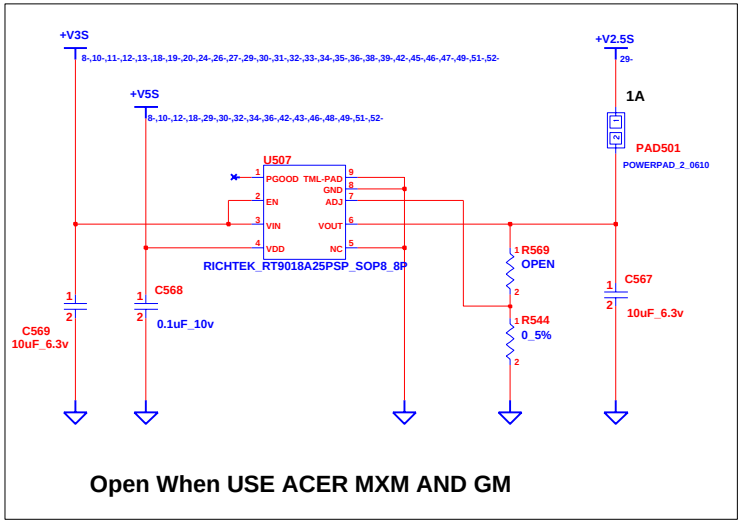

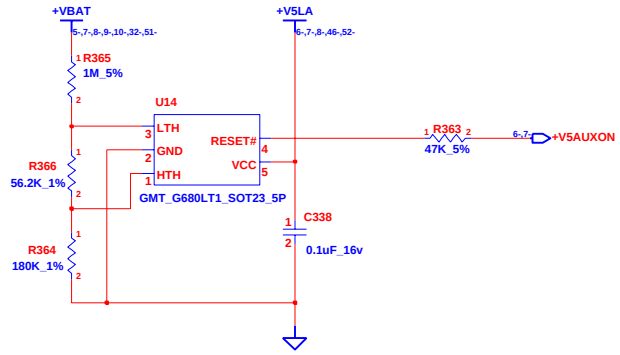

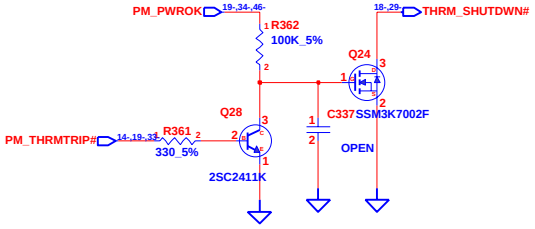

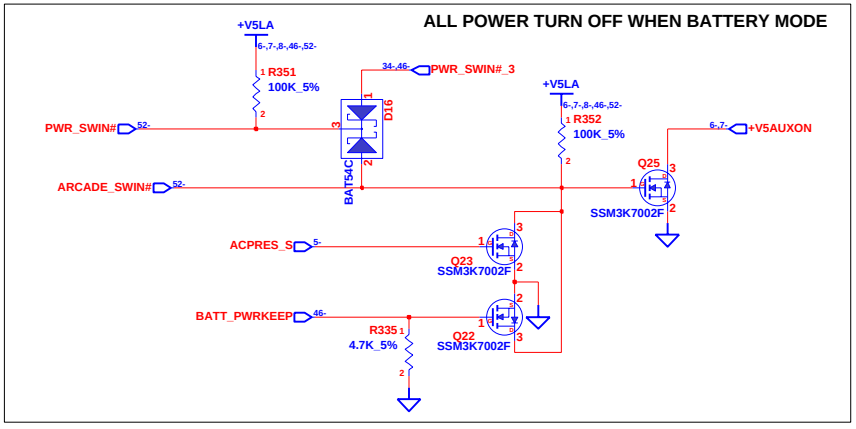

CHANGE by	Drawer_Name	6-Jun-2008	

INVENTEC

TITLE *KiliManjaro 2.0(Montevina)*
+V2.5S / RESET

SIZE	CODE	DOC. NUMBER	REV
A3	CS	1310A2207301-0-M1-002	A00

SHEET 6 OF 58

WWW.AliSaler.Com

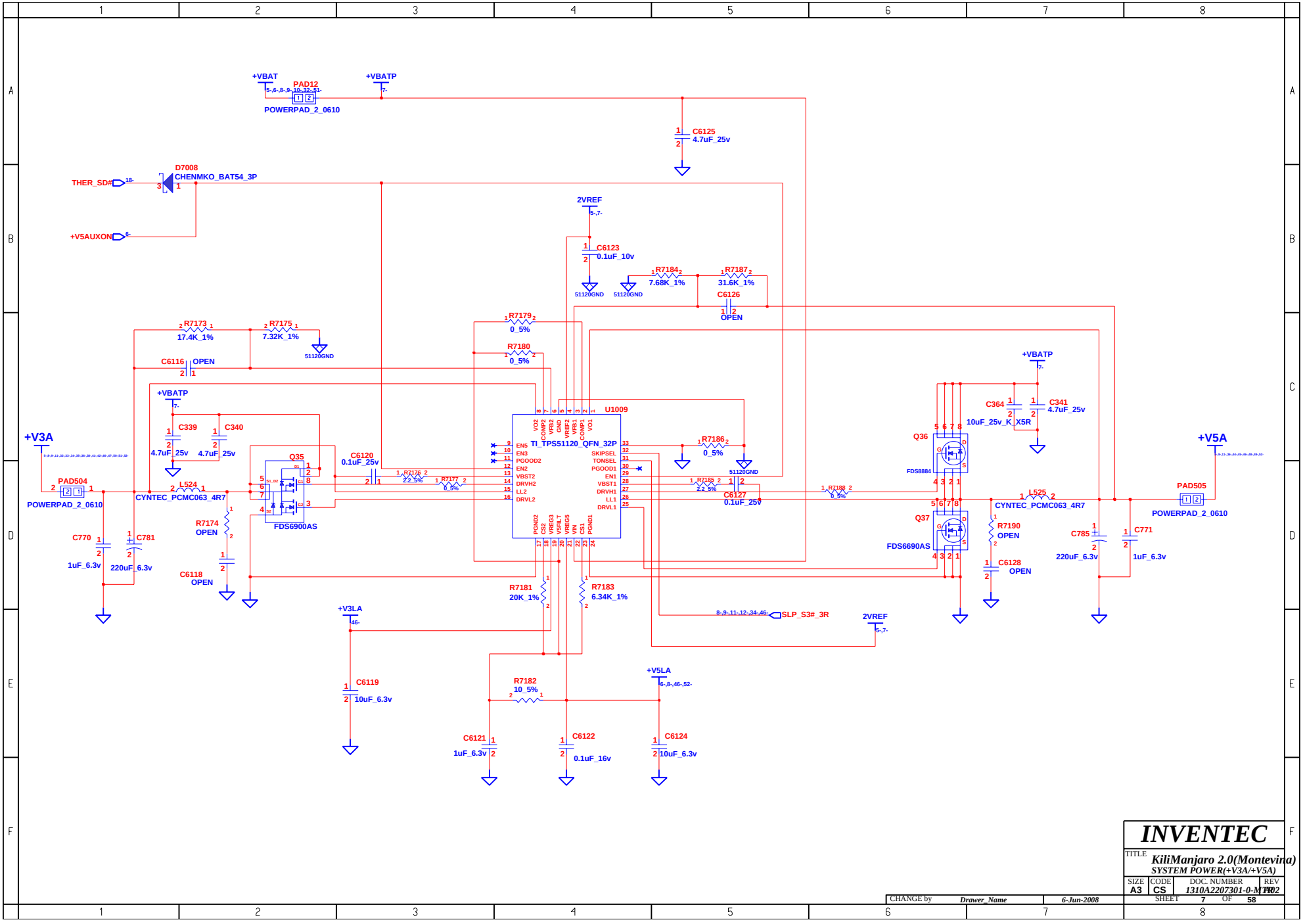

INVENTEC

TITLE: *KiliManjaro 2.0(Montevina)*
SYSTEM POWER(+V3A/+V5A)

SIZE	CODE	DOC. NUMBER	REV
A3	CS	*1310A2207301-0-M1-02*	*1.0*

SHEET 7 OF 58

CHANGE by	*Drawer_Name*	*6-Jun-2008*

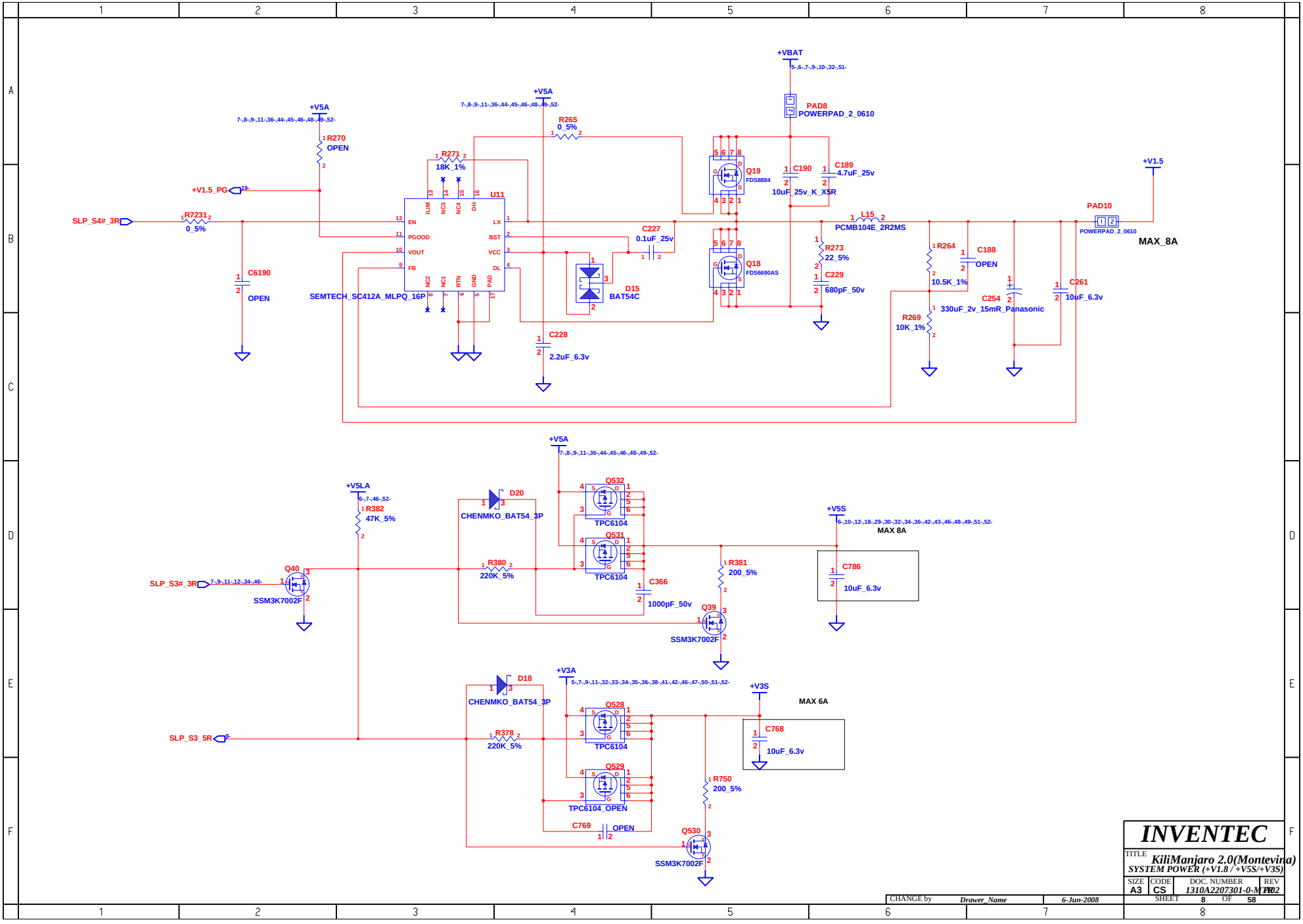

CHANGE by	Drawer_Name	6-Jun-2008	

INVENTEC

TITLE: *KiliManjaro 2.0(Montevina)*
SYSTEM POWER (+V1.8 / +V5S/+V3S)

SIZE	CODE	DOC. NUMBER	REV
A3	CS	1310A2207301-0-M1-02	1.0

SHEET 8 OF 58

WWW.AliSaler.Com

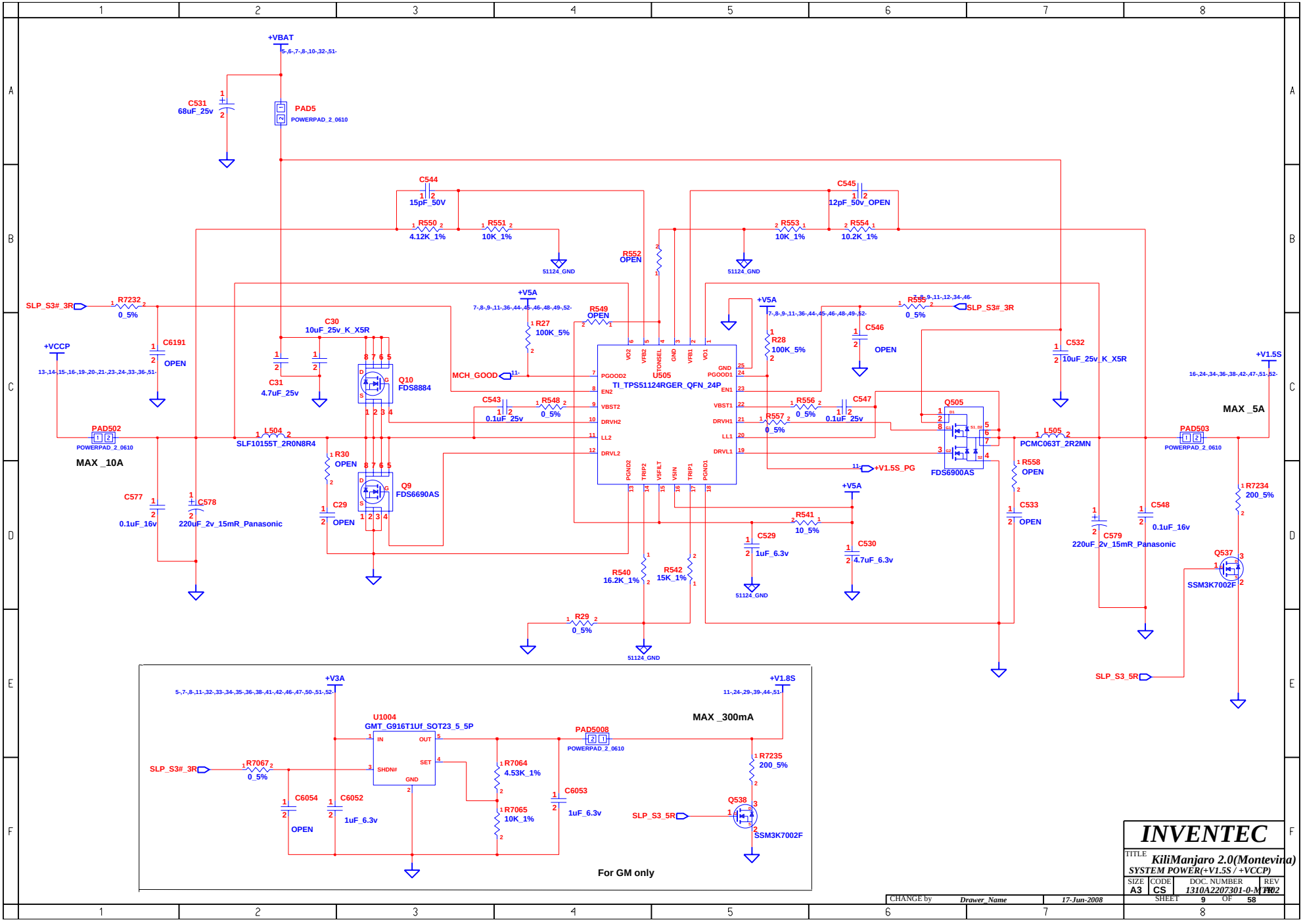

CHANGE by	Drawer_Name	17-Jun-2008	

INVENTEC

TITLE: *KiliManjaro 2.0(Montevina)*
SYSTEM POWER(+V1.5S / +VCCP)

SIZE	CODE	DOC. NUMBER	REV
A3	CS	1310A2207301-0-MT02	10

SHEET 9 OF 58

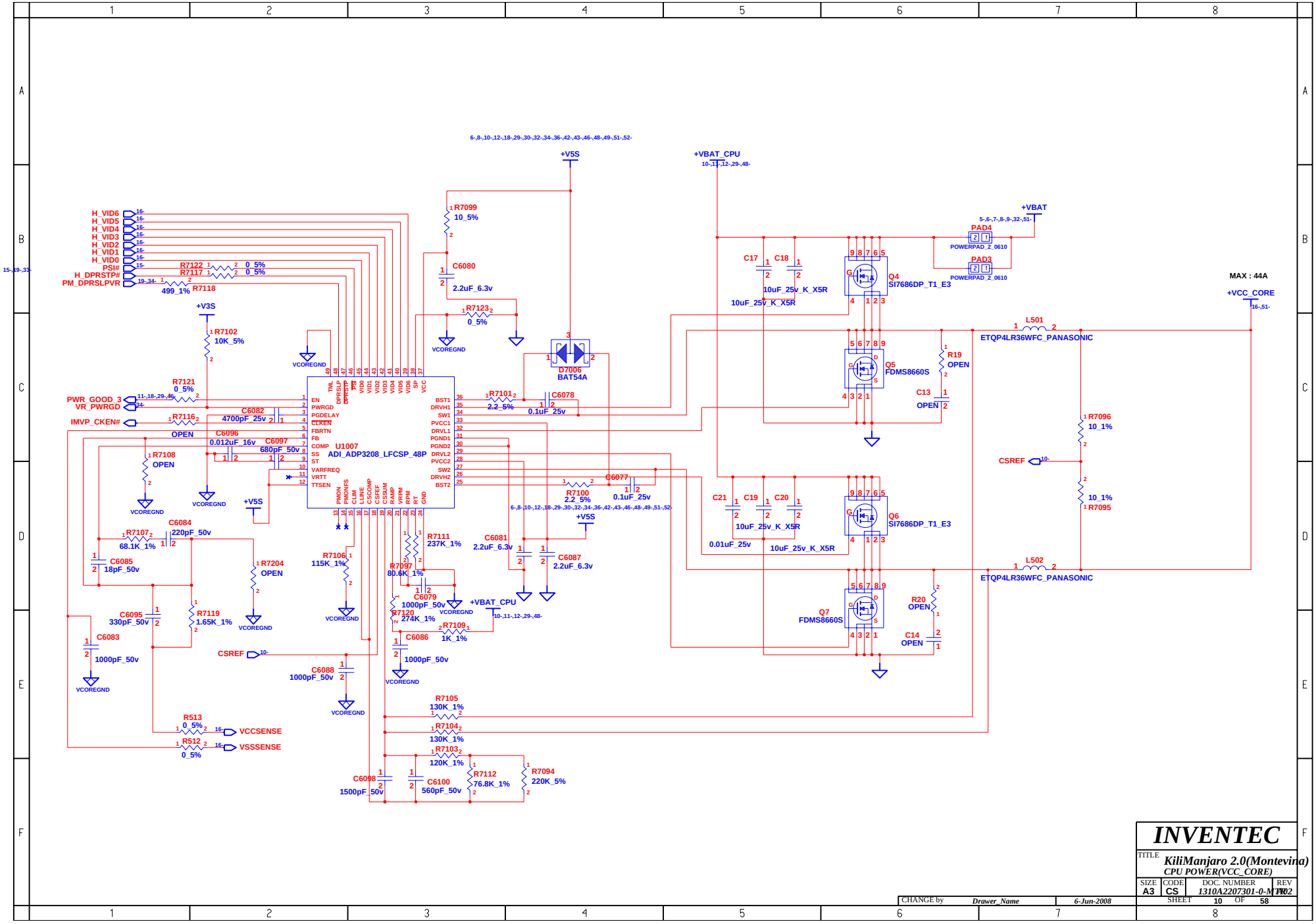

INVENTEC			
TITLE: KiliManjaro 2.0(Montevina) CPU POWER(VCC_CORE)			
SIZE A3	CODE CS	DOC. NUMBER 1310A2207301-0-M1102	REV 1.02
CHANGE by Drawer_Name	6-Jun-2008	SHEET 10 OF 58	

WWW.AliSaler.Com

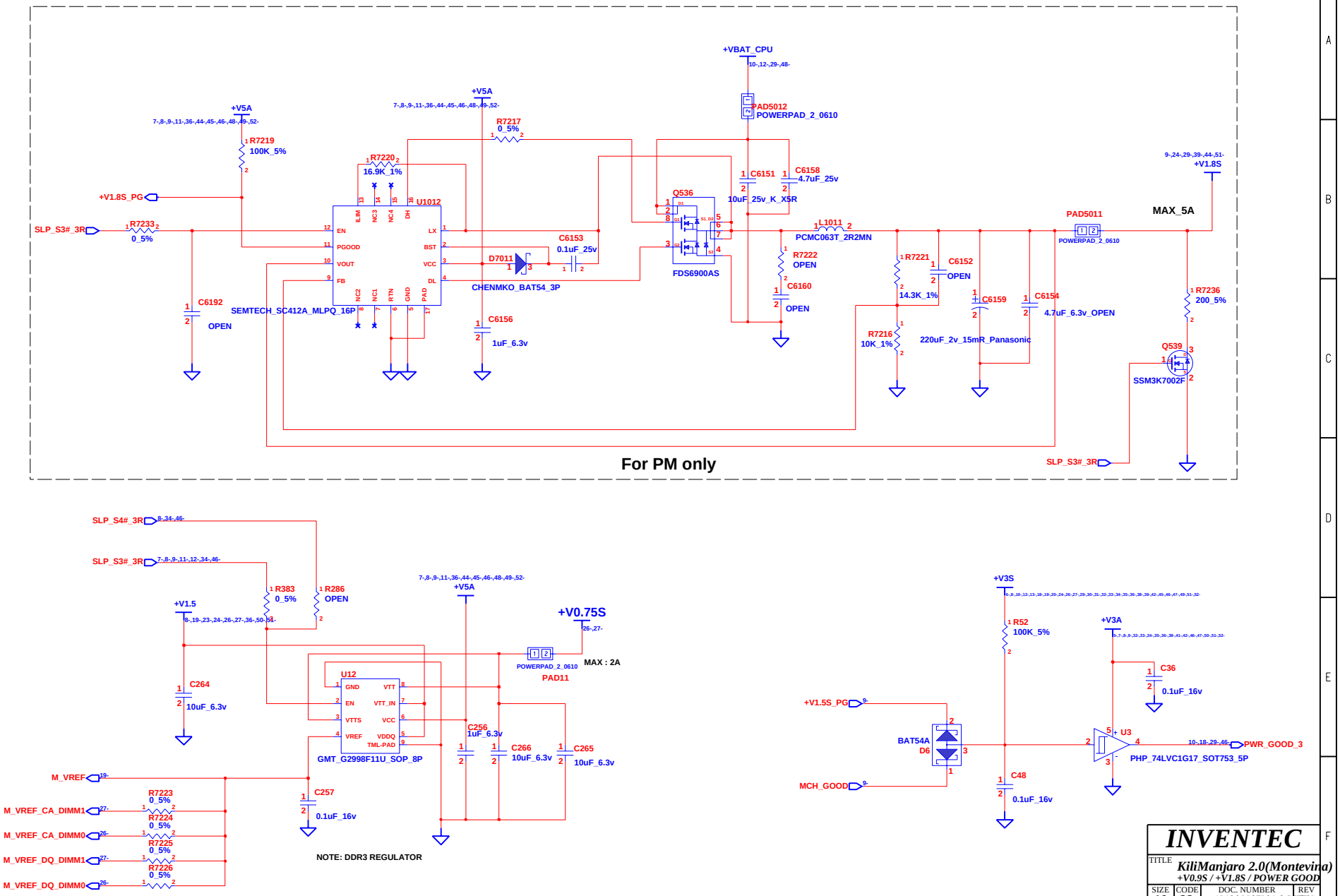

INVENTEC

TITLE: *KiliManjaro 2.0(Montevina)*
+V0.9S / +V1.8S / POWER GOOD

SIZE	CODE	DOC. NUMBER	REV
A3	CS	1310A2207301-0-M[illegible]	[illegible]

SHEET 11 OF 58

CHANGE by	Drawer_Name	6-Jun-2008

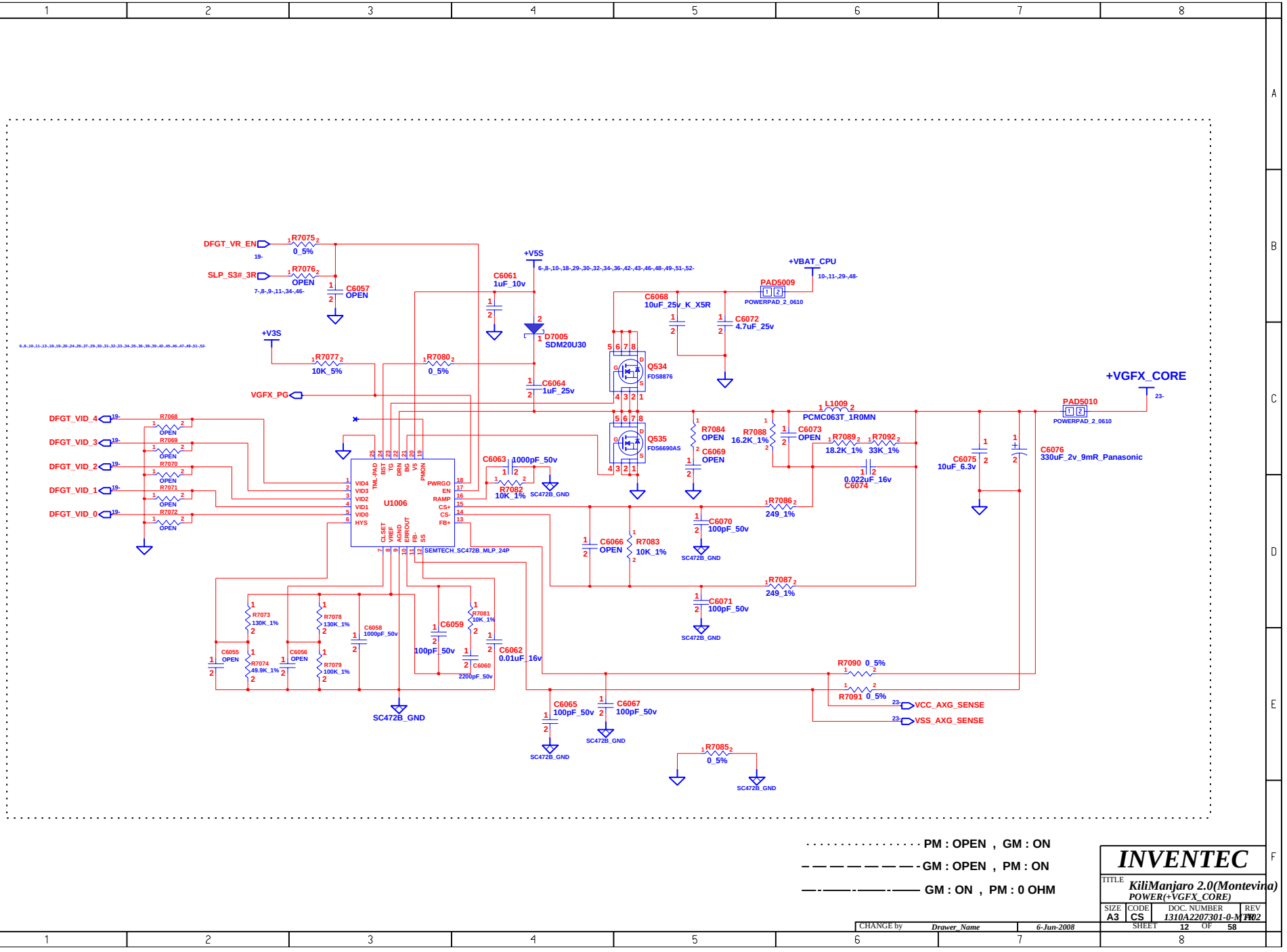

PM : OPEN , GM : ON

GM : OPEN , PM : ON

GM : ON , PM : 0 OHM

INVENTEC			
TITLE: KiliManjaro 2.0(Montevina) POWER(+VGFX_CORE)			
SIZE: A3	CODE: CS	DOC. NUMBER: 1310A2207301-0-M102	REV: 1.0
CHANGE by: Drawer_Name	6-Jun-2008	SHEET 12 OF 58	

WWW.AliSaler.Com

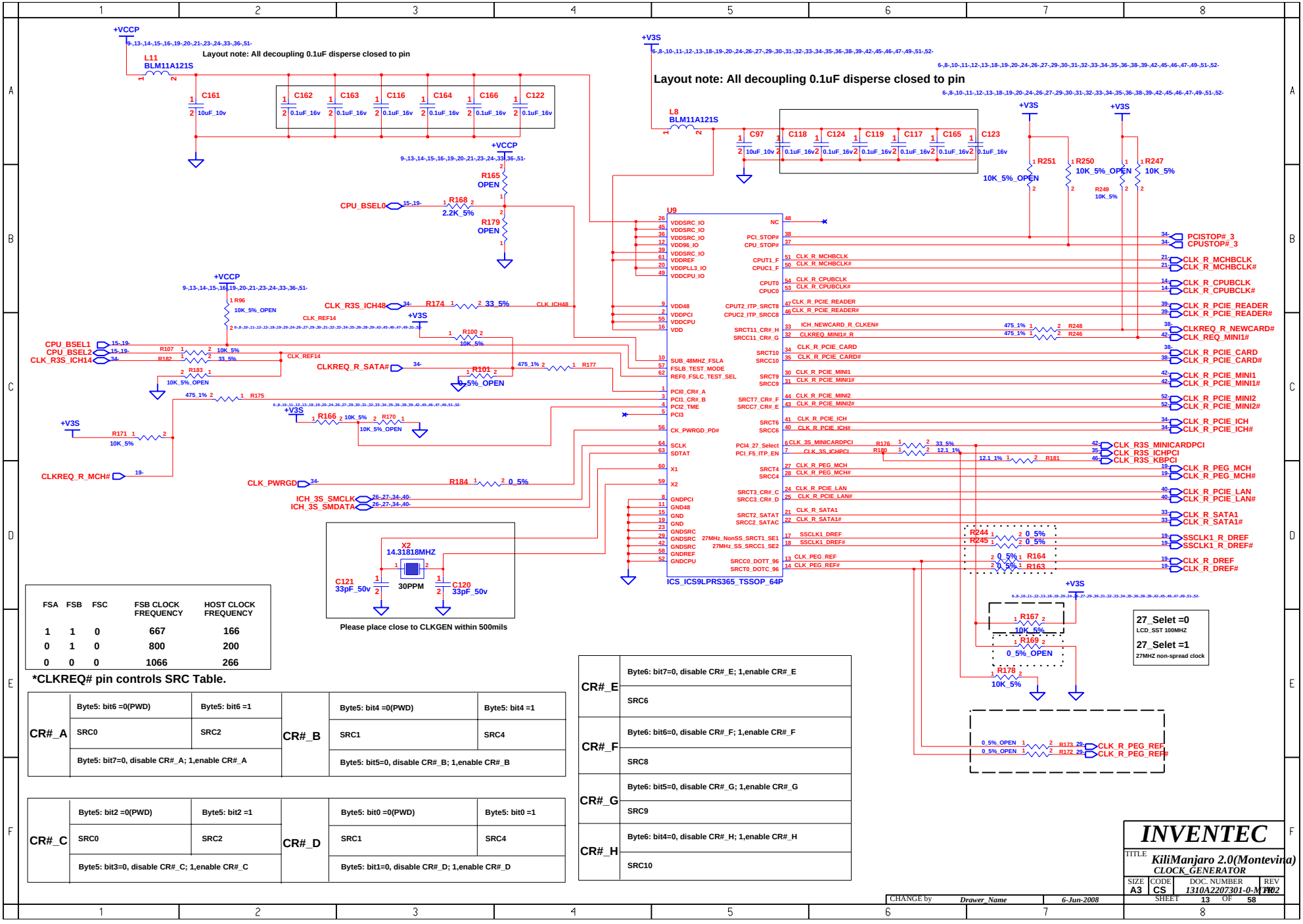

FSA	FSB	FSC	FSB CLOCK FREQUENCY	HOST CLOCK FREQUENCY
1	1	0	667	166
0	1	0	800	200
0	0	0	1066	266

***CLKREQ# pin controls SRC Table.**

CR#_A	Byte5: bit6 =0(PWD)	Byte5: bit6 =1	CR#_B	Byte5: bit4 =0(PWD)	Byte5: bit4 =1
	SRC0	SRC2		SRC1	SRC4
	Byte5: bit7=0, disable CR#_A; 1,enable CR#_A			Byte5: bit5=0, disable CR#_B; 1,enable CR#_B	

CR#_C	Byte5: bit2 =0(PWD)	Byte5: bit2 =1	CR#_D	Byte5: bit0 =0(PWD)	Byte5: bit0 =1
	SRC0	SRC2		SRC1	SRC4
	Byte5: bit3=0, disable CR#_C; 1,enable CR#_C			Byte5: bit1=0, disable CR#_D; 1,enable CR#_D	

CR#_E	Byte6: bit7=0, disable CR#_E; 1,enable CR#_E
	SRC6
CR#_F	Byte6: bit6=0, disable CR#_F; 1,enable CR#_F
	SRC8
CR#_G	Byte6: bit5=0, disable CR#_G; 1,enable CR#_G
	SRC9
CR#_H	Byte6: bit4=0, disable CR#_H; 1,enable CR#_H
	SRC10

CHANGE by	Drawer_Name	6-Jun-2008	

INVENTEC

TITLE: *KiliManjaro 2.0(Montevina)*
CLOCK_GENERATOR

SIZE	CODE	DOC. NUMBER	REV
A3	CS	1310A2207301-0-MT02	1.0

SHEET 13 OF 58

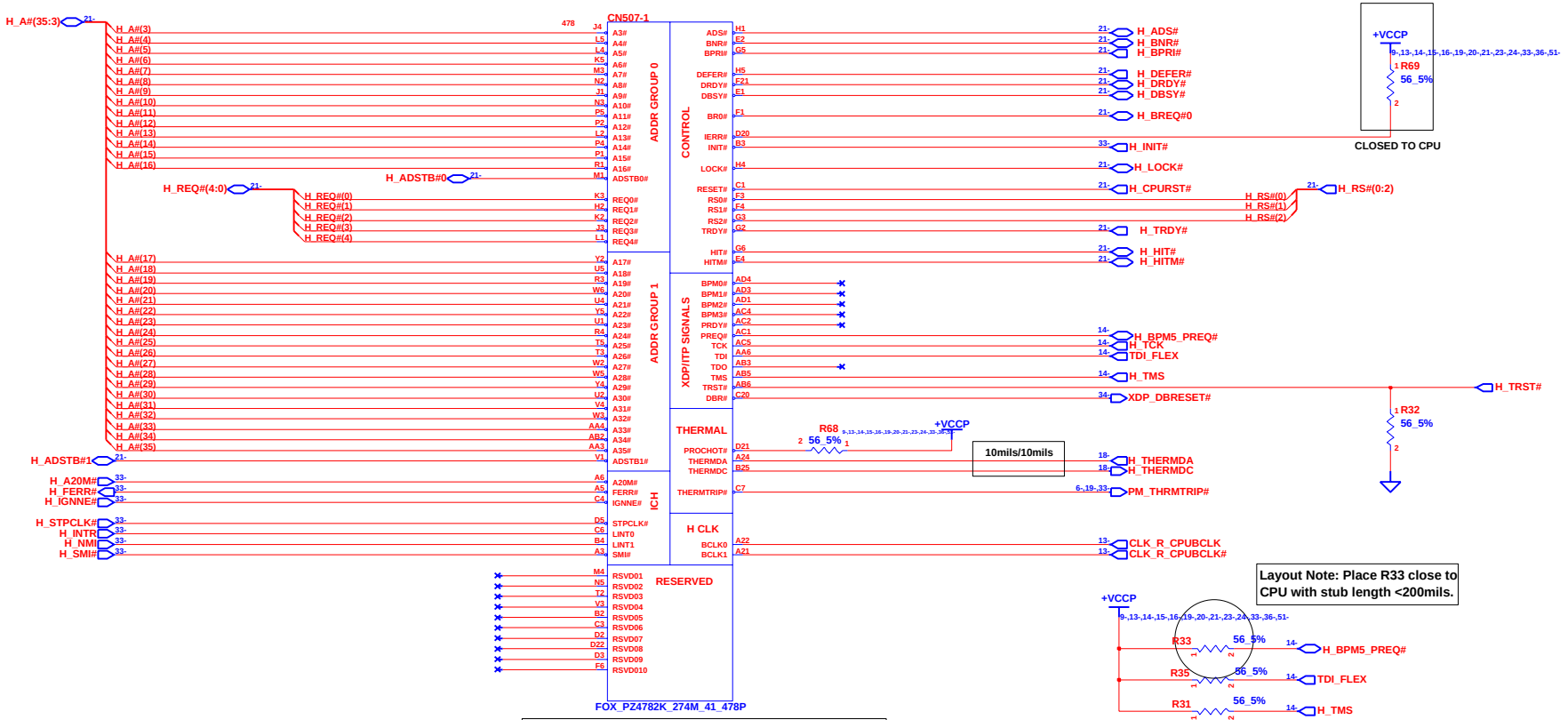

INVENTEC

TITLE KiliManjaro 2.0(Montevina) Penryn-1

SIZE	CODE	DOC. NUMBER	REV
A3	CS	1310A2207301-0-MT02	1.0

CHANGE by Drawer_Name 6-Jun-2008 SHEET 14 OF 58

WWW.AliSaler.Com

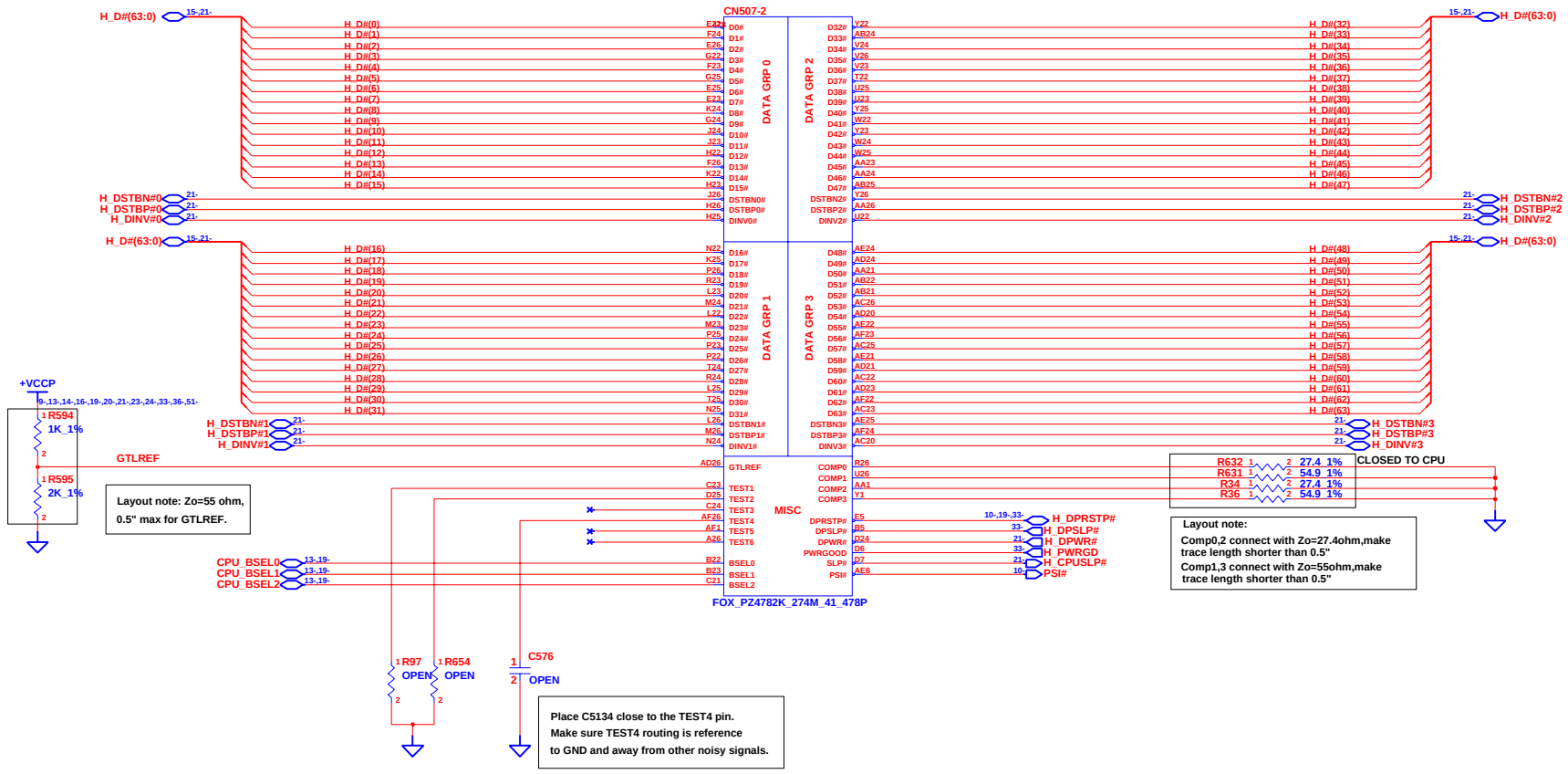

INVENTEC			
TITLE	KiliManjaro 2.0(Montevina) Penryn-2		
SIZE A3	CODE CS	DOC. NUMBER 1310A2207301-0-M1-02	REV A0
CHANGE by Drawer_Name	6-Jun-2008	SHEET 15 OF 58	

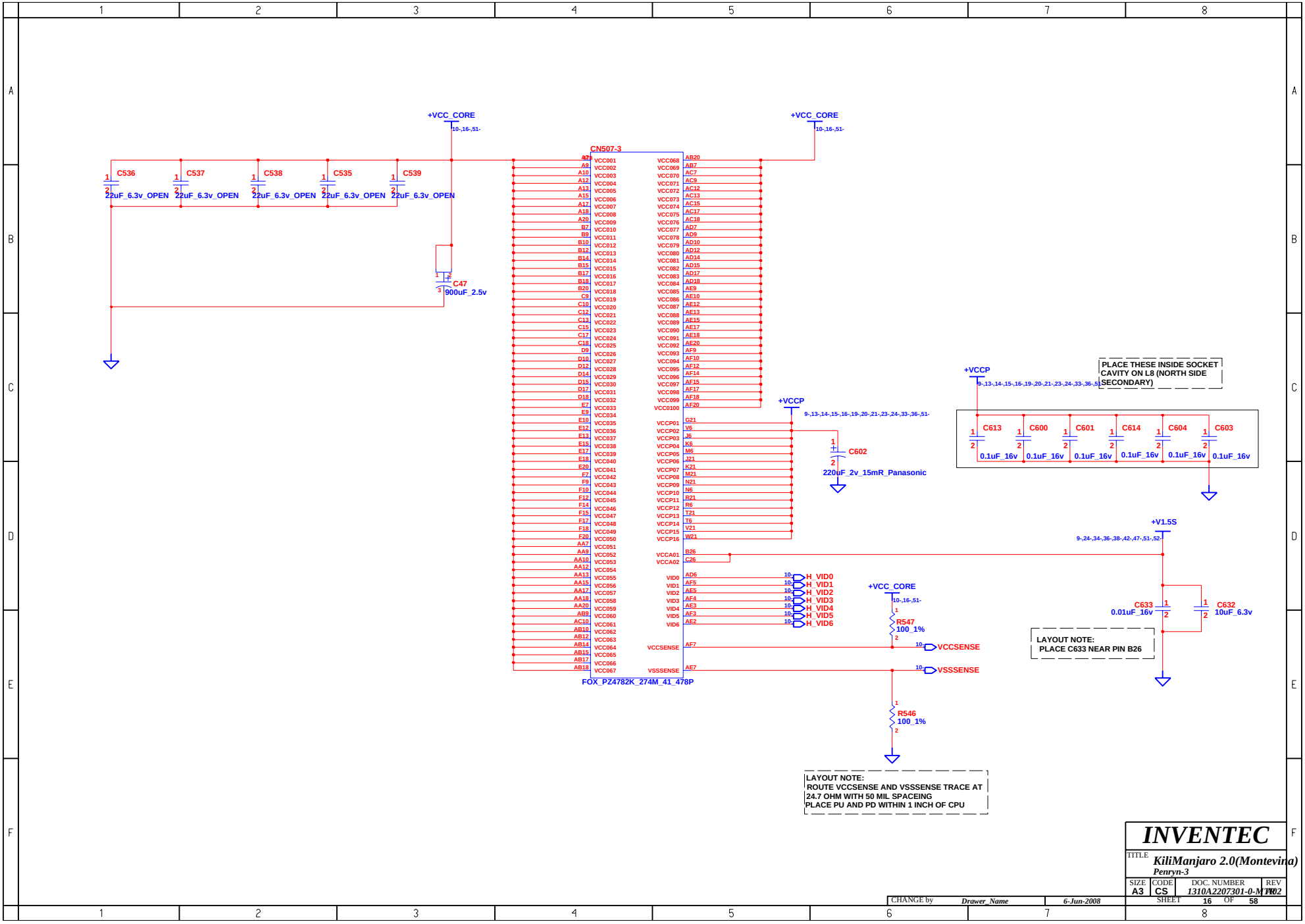

WWW.AliSaler.Com

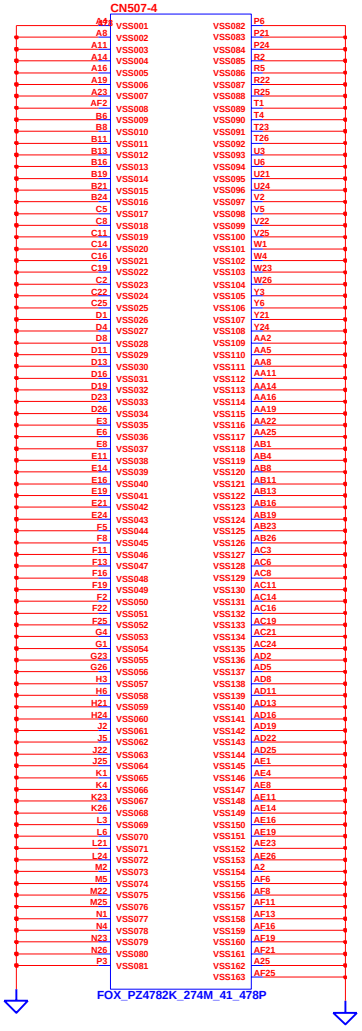

CHANGE by	Drawer_Name	6-Jun-2008	

INVENTEC

TITLE *KiliManjaro 2.0(Montevina)*
Penryn-4

SIZE	CODE	DOC. NUMBER	REV
A3	CS	1310A2207301-0-M1-02	1.0

SHEET 17 OF 58

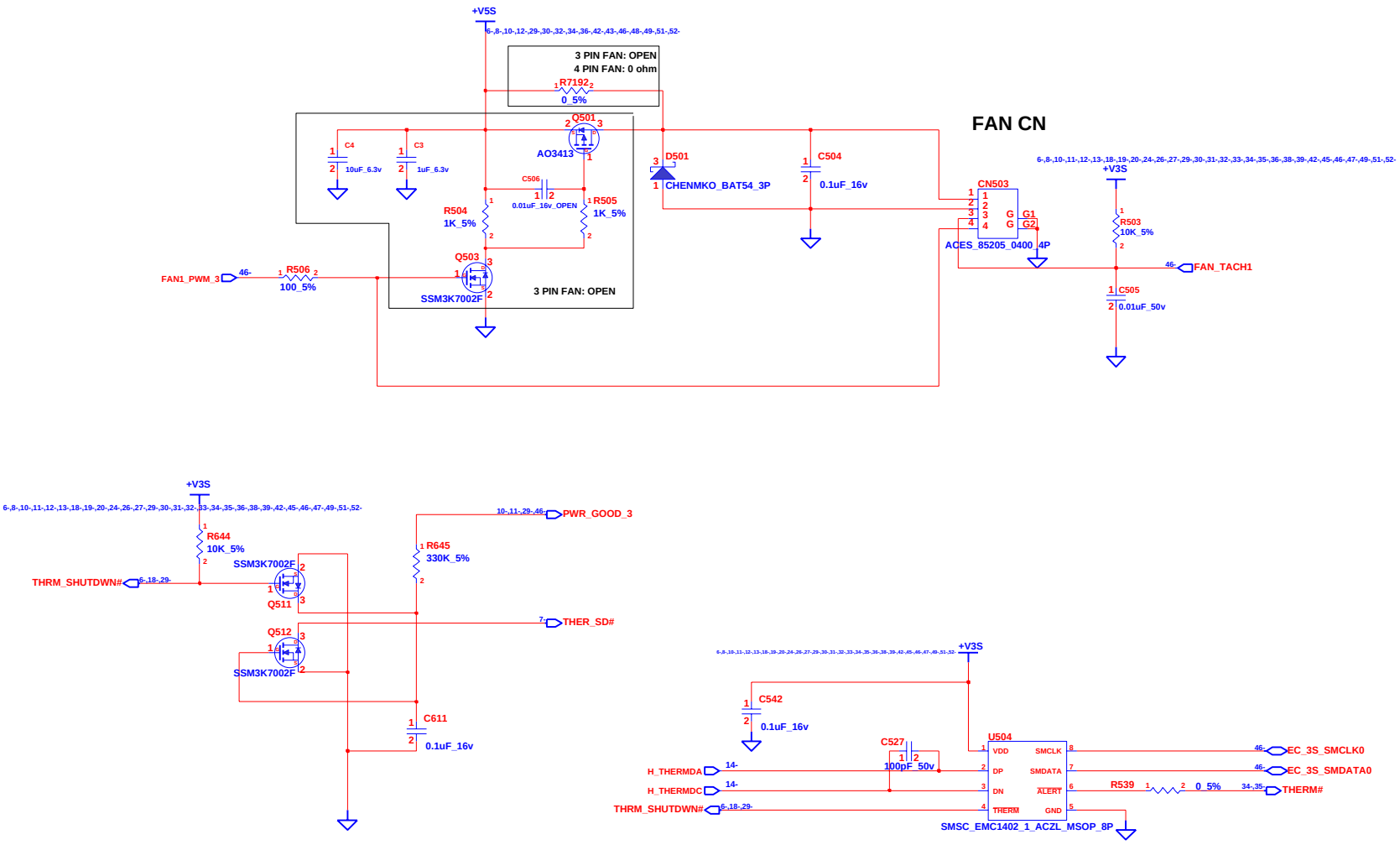

Thermal Sensor For CPU

INVENTEC			
TITLE	KiliManjaro 2.0(Montevina) THERMAL&FAN CONTROLLER		
SIZE A3	CODE CS	DOC. NUMBER 1310A2207301-0-M1-02	REV
CHANGE by Drawer_Name	6-Jun-2008	SHEET 18 OF 58	

WWW.AliSaler.Com

MCH_CFG(5)	LOW=DMIx2 HIGH=DMIx4

MCH_CFG(7) (CPU Strap)	LOW=RSVD HIGH=Mobile CPU

MCH_CFG(9) PCIE Graphics Lane	LOW=Reverse Lane HIGH=Normal operation

MCH_CFG(11) PSB 4X CLK ENABLE	LOW=CALISTOGA HIGH=RESERVED

MCH_CFG(13:12) XOR/ALLZ	00=PARTIAL CLOCK GATING DISABLE 01=XOR MODE ENABLE 10=ALL-Z MODE ENABLE 11=NORMAL OPERATION

MCH_CFG(16) (FSB Dynamic ODT)	LOW=Dynamic ODT Disable HIGH=Dynamic ODT Enable

NOTE : THE RECOMMENDED
PULL-UP RESISTOR VALUE IS 4.02K OHM
PULL-DOWN RESISTOR VALUE IS 2.21K OHM

NOTE: CFG[2:0] STRP : 010b : 800 MT/S
011b : 667 MT/S
000b : 1066 MT/S

MCH_CFG(6) (ITPM Host Interface)	LOW=ITPM Host Interface Enable HIGH=ITPM Host Interface Disable

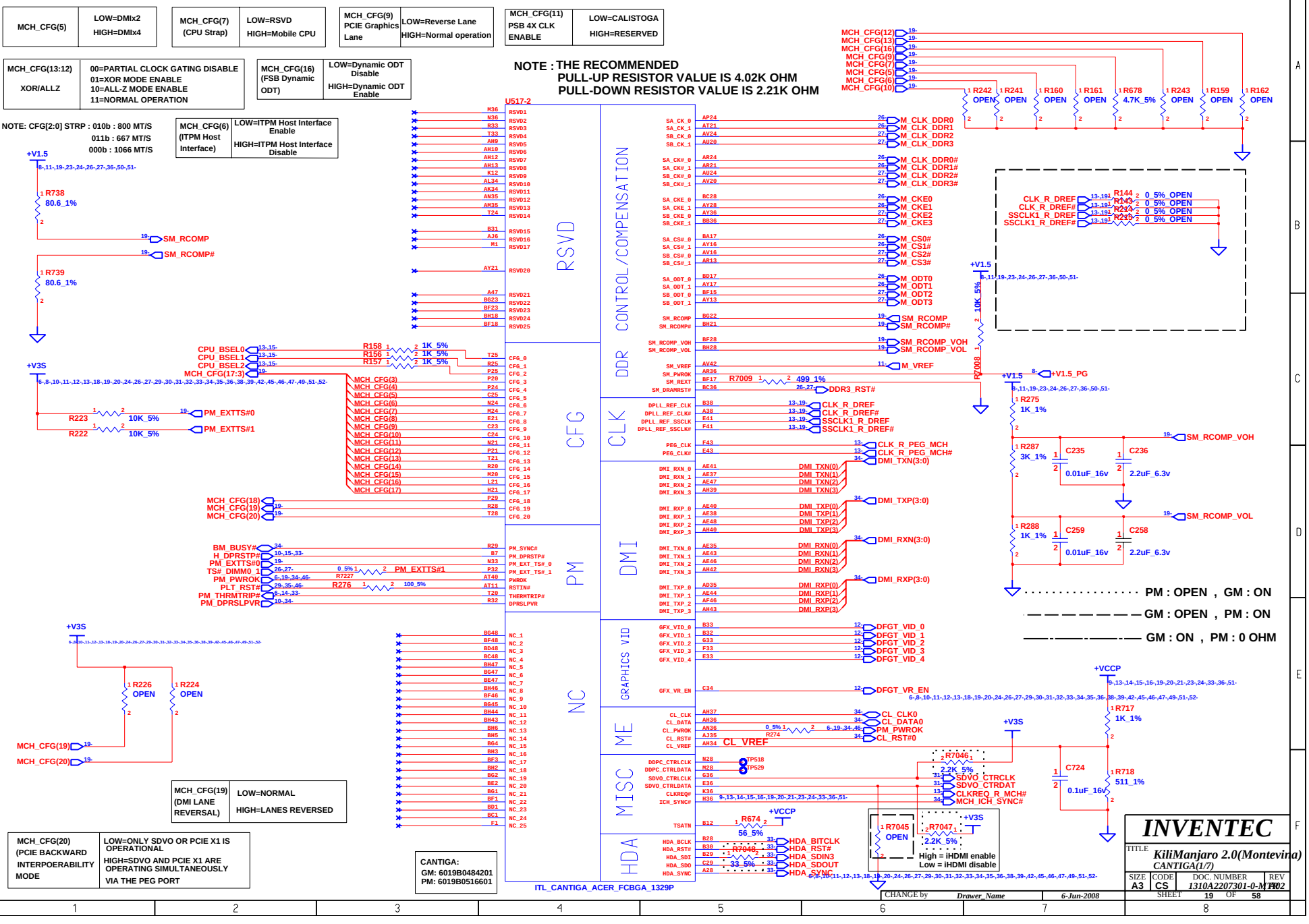

PM : OPEN , GM : ON

GM : OPEN , PM : ON

GM : ON , PM : 0 OHM

MCH_CFG(19) (DMI LANE REVERSAL)	LOW=NORMAL HIGH=LANES REVERSED

MCH_CFG(20) (PCIE BACKWARD INTERPOERABILITY MODE	LOW=ONLY SDVO OR PCIE X1 IS OPERATIONAL HIGH=SDVO AND PCIE X1 ARE OPERATING SIMULTANEOUSLY VIA THE PEG PORT

CANTIGA:
GM: 6019B0484201
PM: 6019B0516601

INVENTEC

TITLE: KiliManjaro 2.0(Montevina)
CANTIGA(1/7)

SIZE	CODE	DOC. NUMBER	REV
A3	CS	1310A2207301-0-MT02	1.02

CHANGE by Drawer_Name 6-Jun-2008 SHEET 19 OF 58

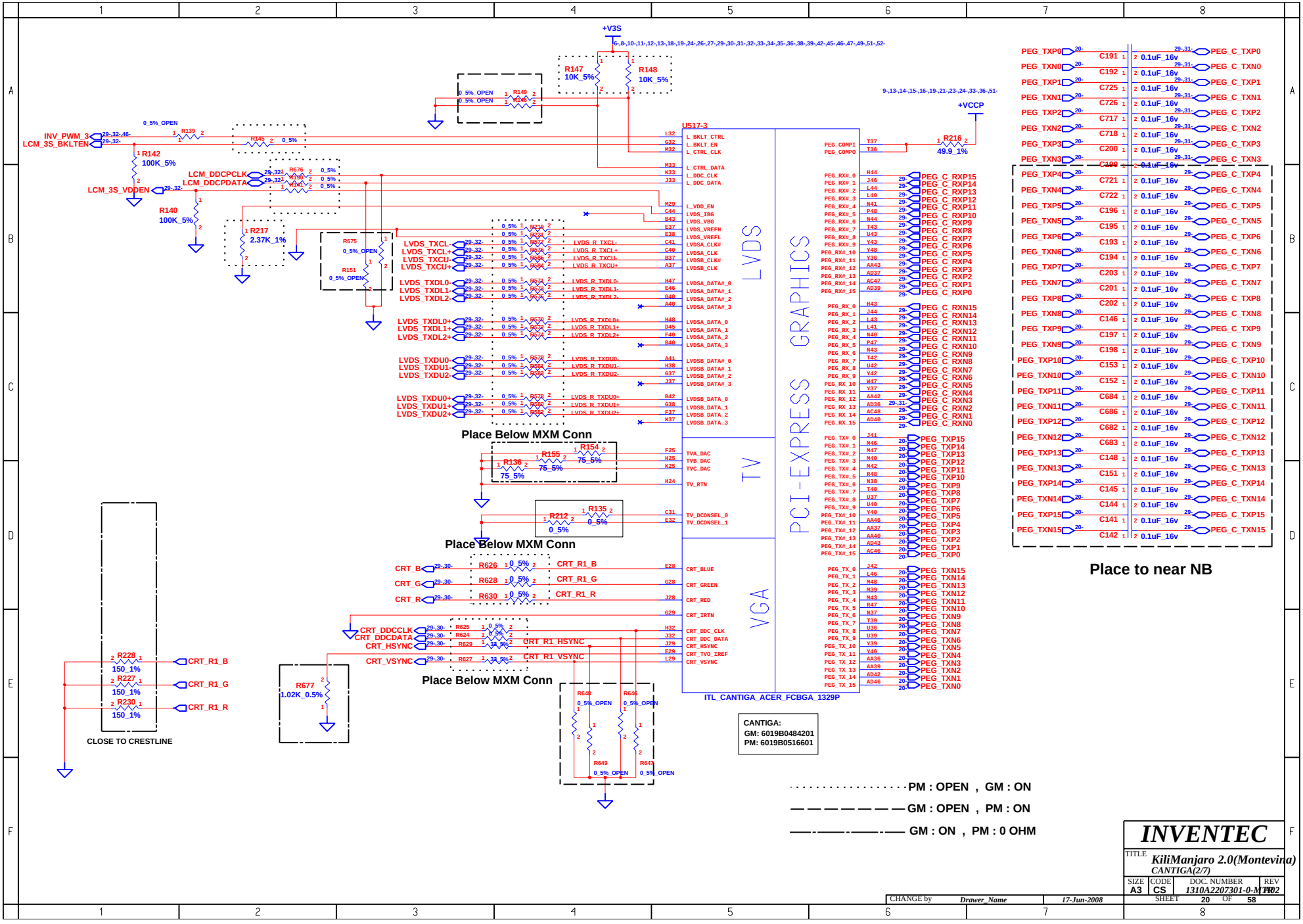

WWW.AliSaler.Com

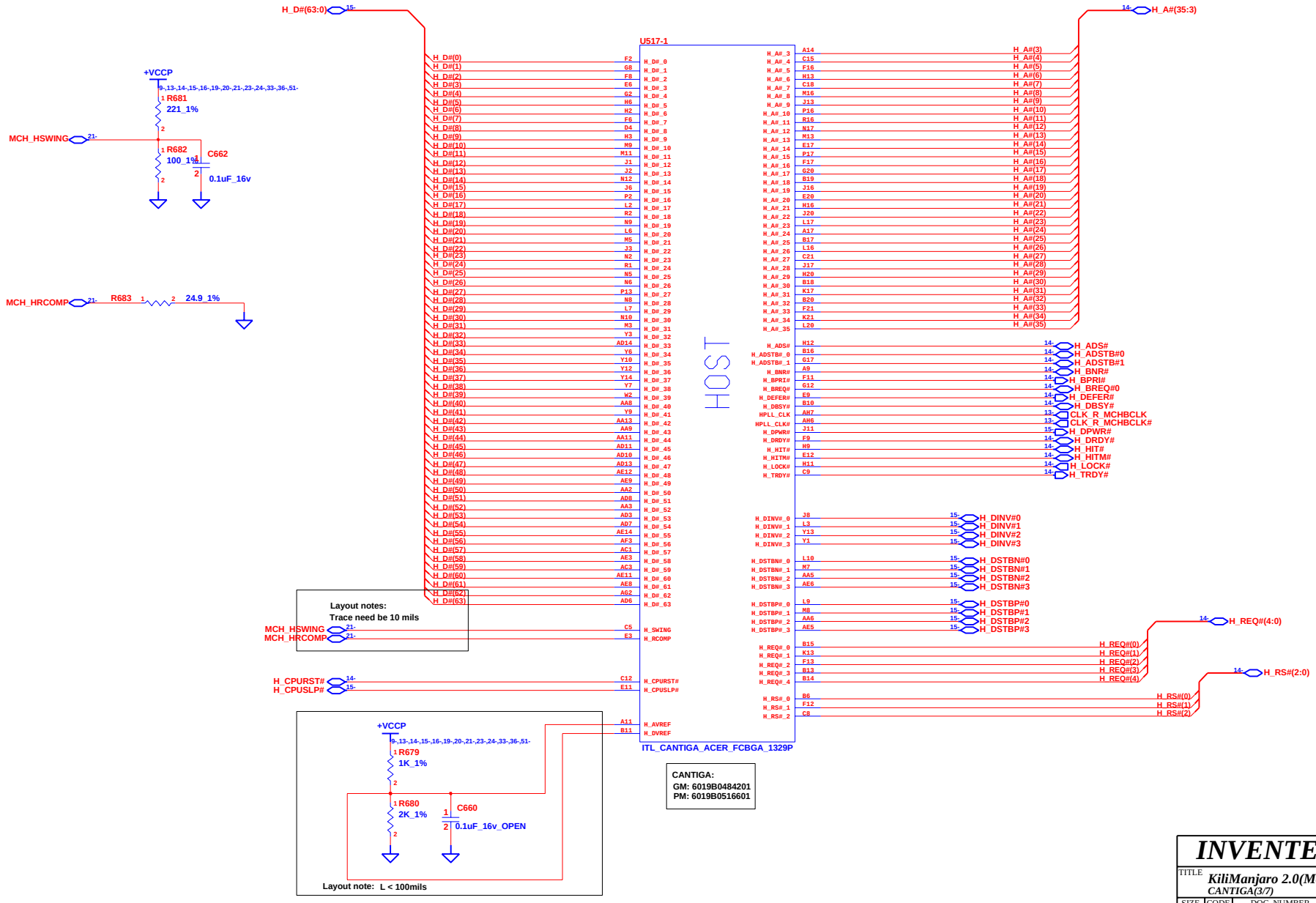

INVENTEC

TITLE KiliManjaro 2.0(Montevina)
CANTIGA(3/7)

SIZE	CODE	DOC. NUMBER	REV
A3	CS	1310A2207301-0-MT02	A02

SHEET 21 OF 58

CHANGE by Drawer_Name 6-Jun-2008

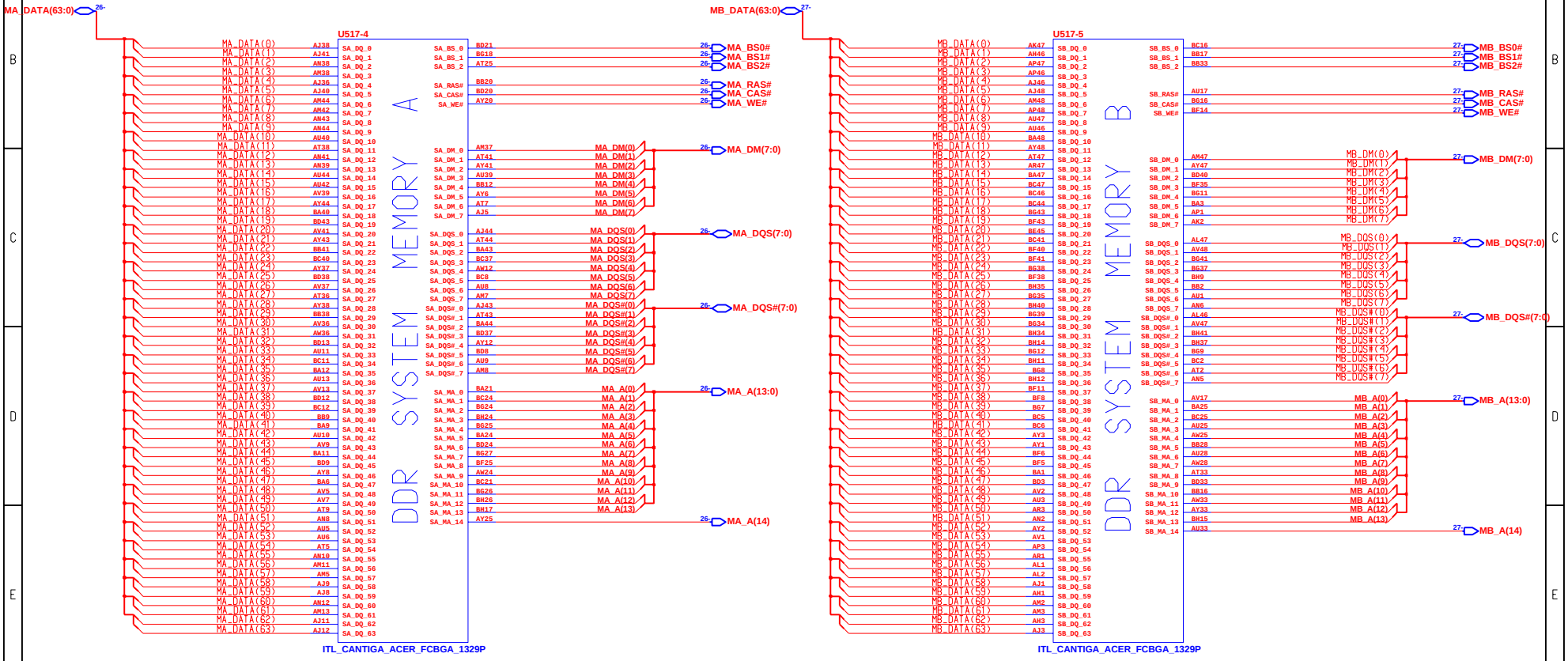

CANTIGA:
GM: 6019B0484201
PM: 6019B0516601

CANTIGA:
GM: 6019B0484201
PM: 6019B0516601

INVENTEC			
TITLE: KiliManjaro 2.0(Montevina) CANTIGA(4/7)			
SIZE: A3	CODE: CS	DOC. NUMBER: 1310A2207301-0-M1-02	REV: A00
CHANGE by: Drawer_Name	6-Jun-2008	SHEET 22 OF 58	

WWW.AliSaler.Com

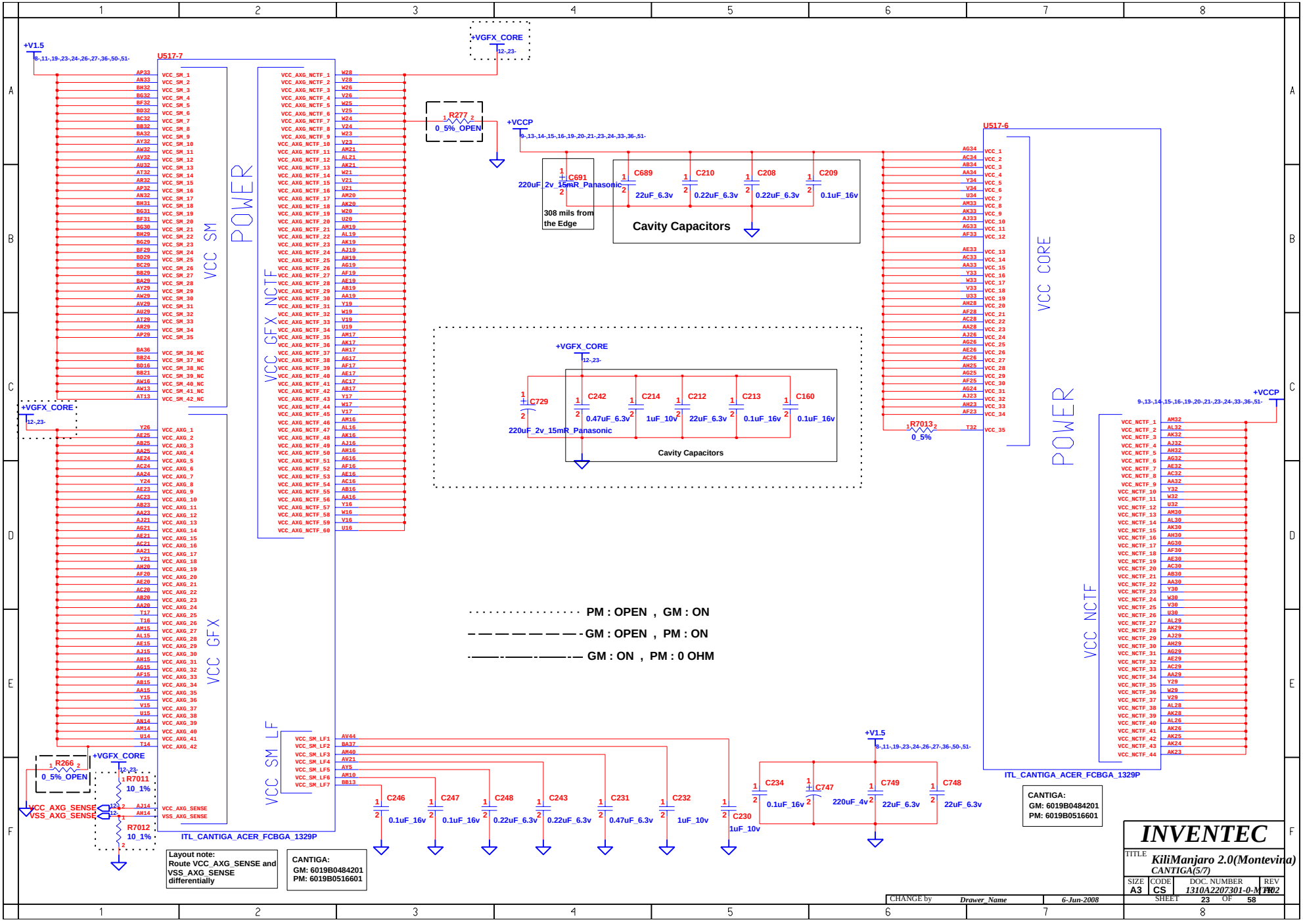
+V1.5
U517-7
POWER
VCC_SM
VCC_GFX_NCTF
VCC_GFX
VCC_SM_LF
+VGFX_CORE
R277
0_5%_OPEN
+VCCP
C691
220uF_2v_15mR_Panasonic
308 mils from the Edge
C689
22uF_6.3v
C210
0.22uF_6.3v
C208
0.22uF_6.3v
C209
0.1uF_16v
Cavity Capacitors
U517-6
VCC_CORE
C729
220uF_2v_15mR_Panasonic
C242
0.47uF_6.3v
C214
1uF_10v
C212
22uF_6.3v
C213
0.1uF_16v
C160
0.1uF_16v
R7013
0_5%
PM : OPEN , GM : ON
GM : OPEN , PM : ON
GM : ON , PM : 0 OHM
R266
0_5%_OPEN
R7011
10_1%
R7012
10_1%
VCC_AXG_SENSE
VSS_AXG_SENSE
C246
0.1uF_16v
C247
0.1uF_16v
C248
0.22uF_6.3v
C243
0.22uF_6.3v
C231
0.47uF_6.3v
C232
1uF_10v
C230
1uF_10v
C234
0.1uF_16v
C747
220uF_4v
C749
22uF_6.3v
C748
22uF_6.3v
ITL_CANTIGA_ACER_FCBGA_1329P
Layout note:
Route VCC_AXG_SENSE and VSS_AXG_SENSE differentially
CANTIGA:
GM: 6019B0484201
PM: 6019B0516601
INVENTEC
TITLE
KiliManjaro 2.0(Montevina)
CANTIGA(5/7)
SIZE A3
CODE CS
DOC. NUMBER 1310A2207301-0-M1-02
REV
SHEET 23 OF 58
CHANGE by Drawer_Name
6-Jun-2008

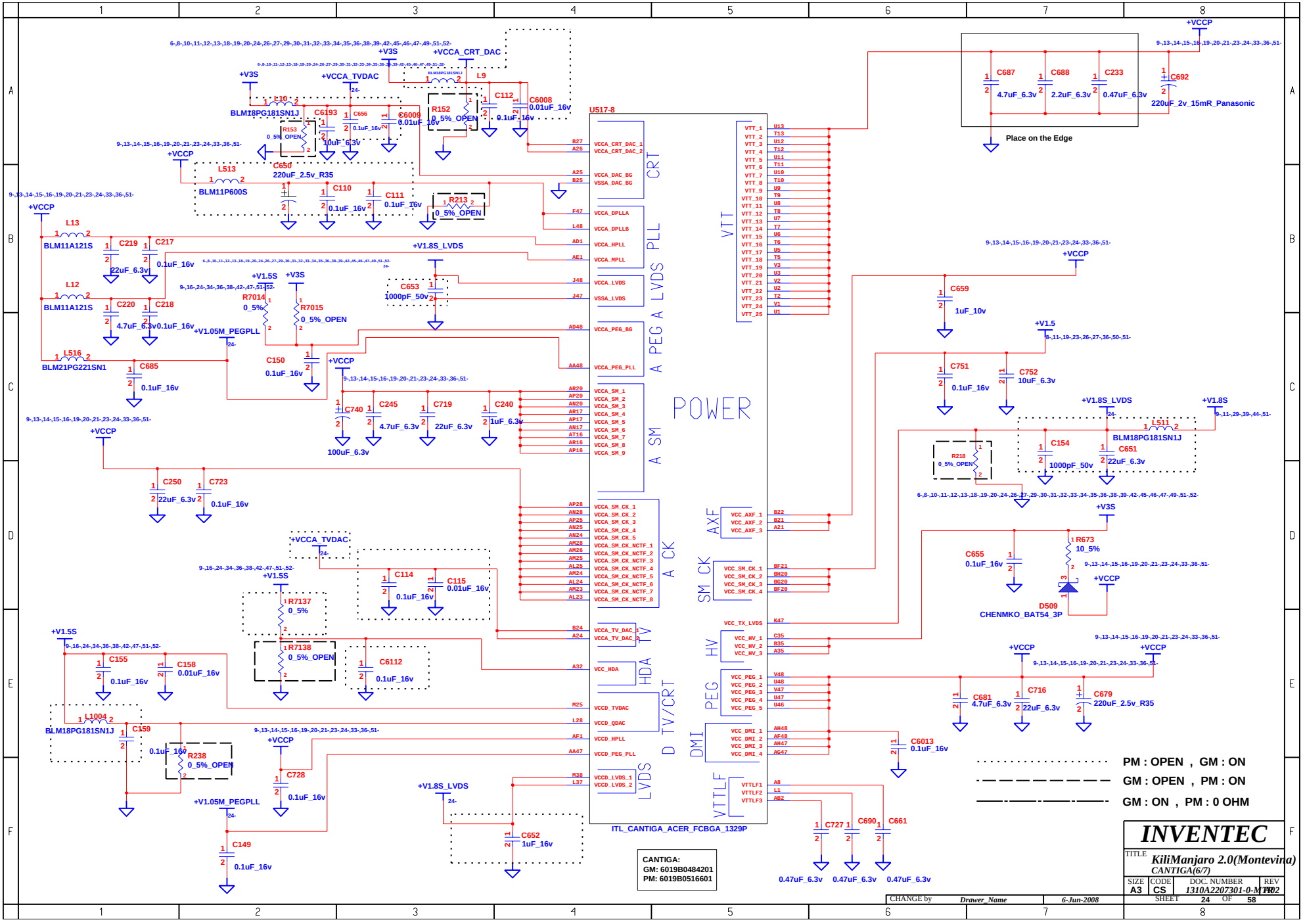

WWW.AliSaler.Com

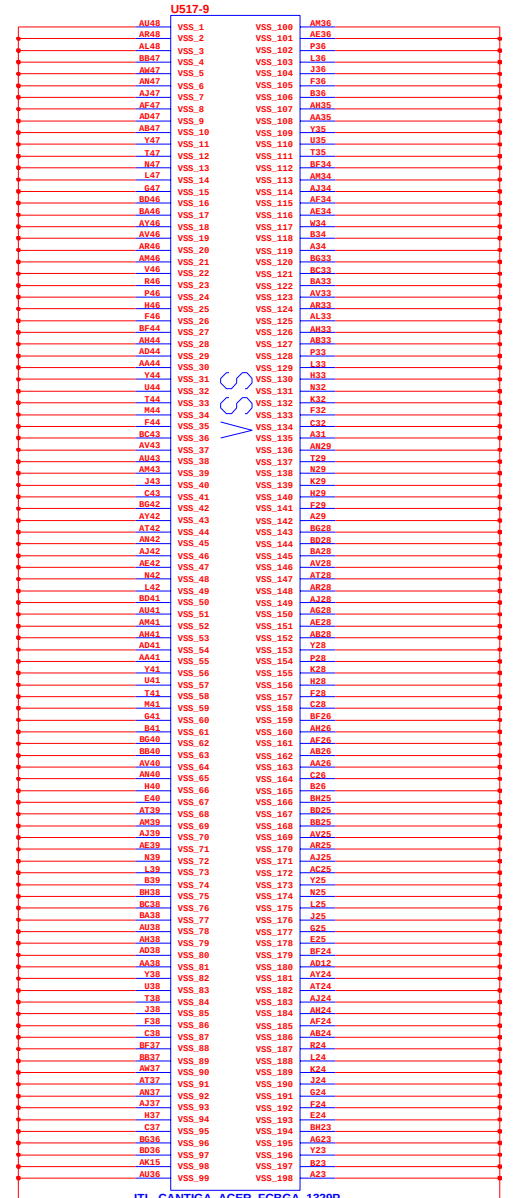

CANTIGA:
GM: 6019B0484201
PM: 6019B0516601

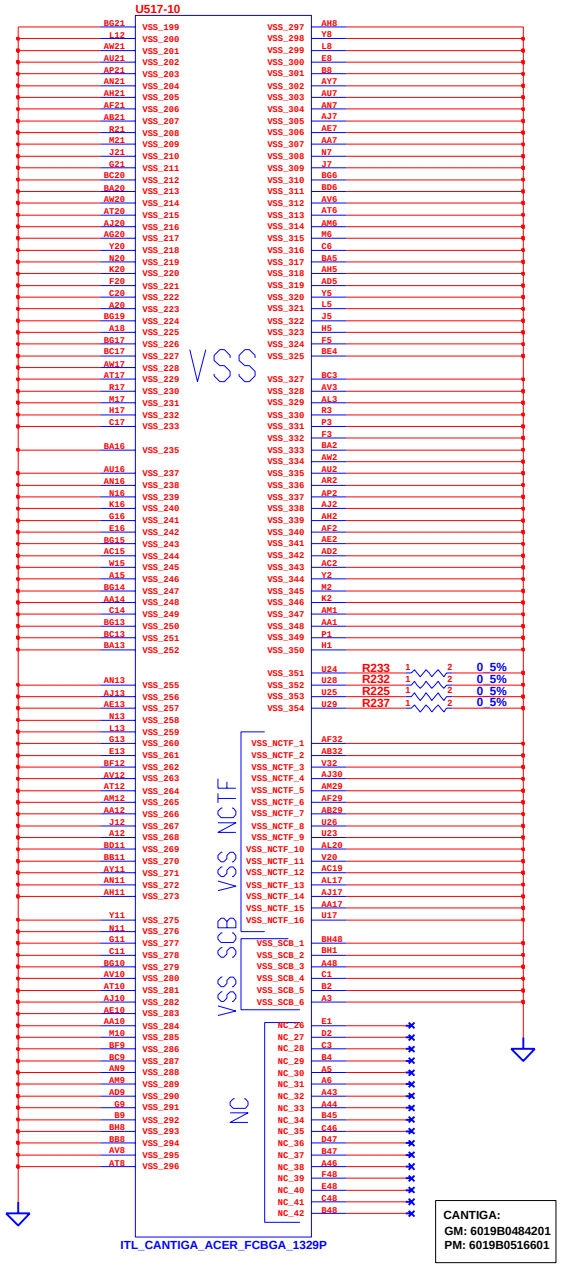

CANTIGA:
GM: 6019B0484201
PM: 6019B0516601

INVENTEC

TITLE *KiliManjaro 2.0(Montevina)*
CANTIGA(7/7)

SIZE	CODE	DOC. NUMBER	REV
A3	CS	1310A2207301-0-MB02	1.0

CHANGE by *Drawer_Name* *6-Jun-2008* SHEET 25 OF 58

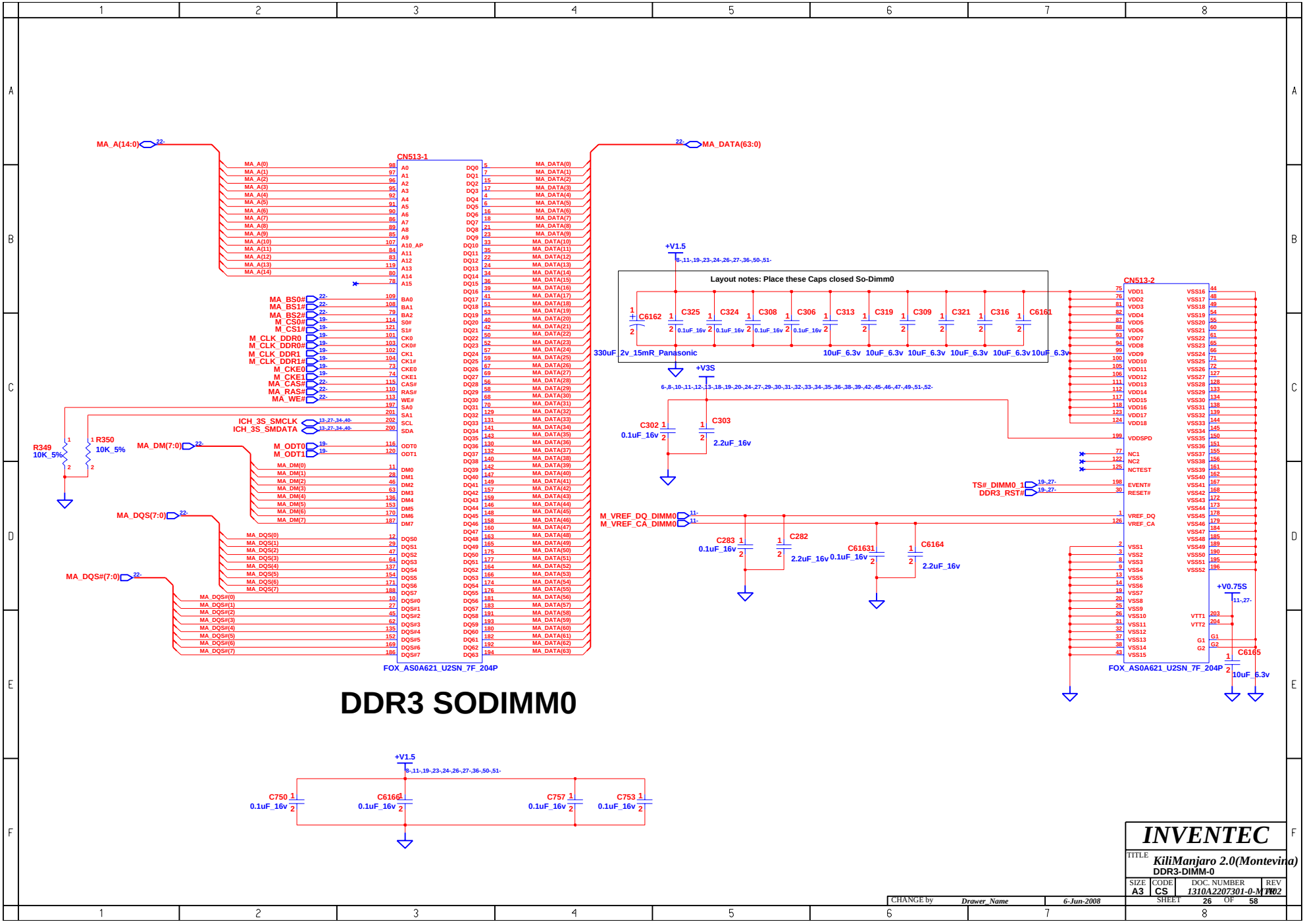

WWW.AliSaler.Com

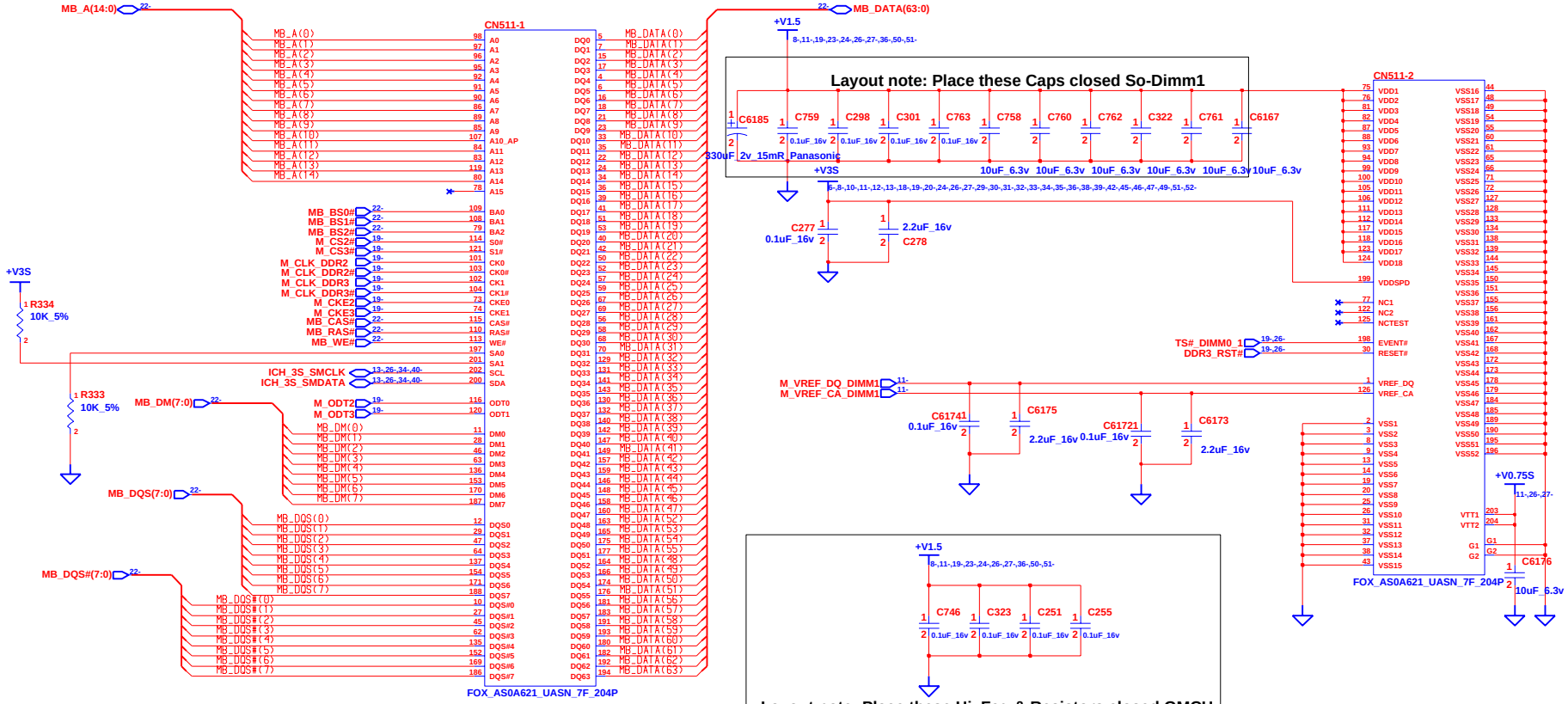

DDR3 SODIMM1

INVENTEC			
TITLE: KiliManjaro 2.0(Montevina) DDR3-DIMM-1			
SIZE A3	CODE CS	DOC. NUMBER 1310A2207301-0-M1-02	REV 1.02
CHANGE by Drawer_Name	6-Jun-2008	SHEET 27 OF 58	

BLANK

INVENTEC					
TITLE	KiliManjaro 2.0(Montevina) DDR2-DAMPING				
SIZE	CODE	DOC. NUMBER	REV		
A3	CS	1310A2207301-0-MT02	P0		
CHANGE by	Drawer_Name	6-Jun-2008	SHEET 28 OF 58		

WWW.AliSaler.Com

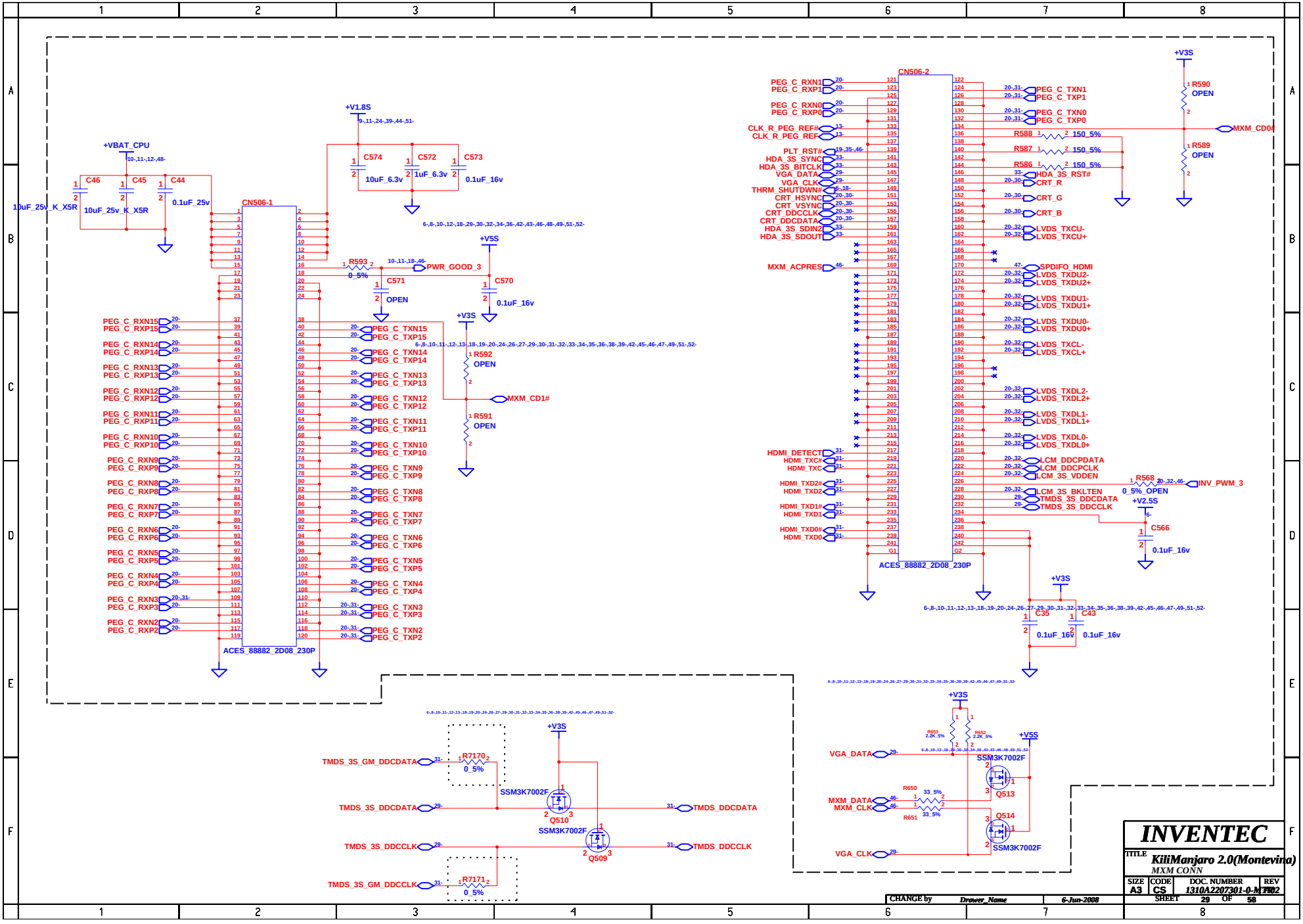

INVENTEC

TITLE: KiliManjaro 2.0(Montevina)
MXM CONN

SIZE	CODE	DOC. NUMBER	REV
A3	CS	1310A2207301-0-MT	02

SHEET 29 OF 58

CHANGE by Drawer_Name 6-Jun-2008

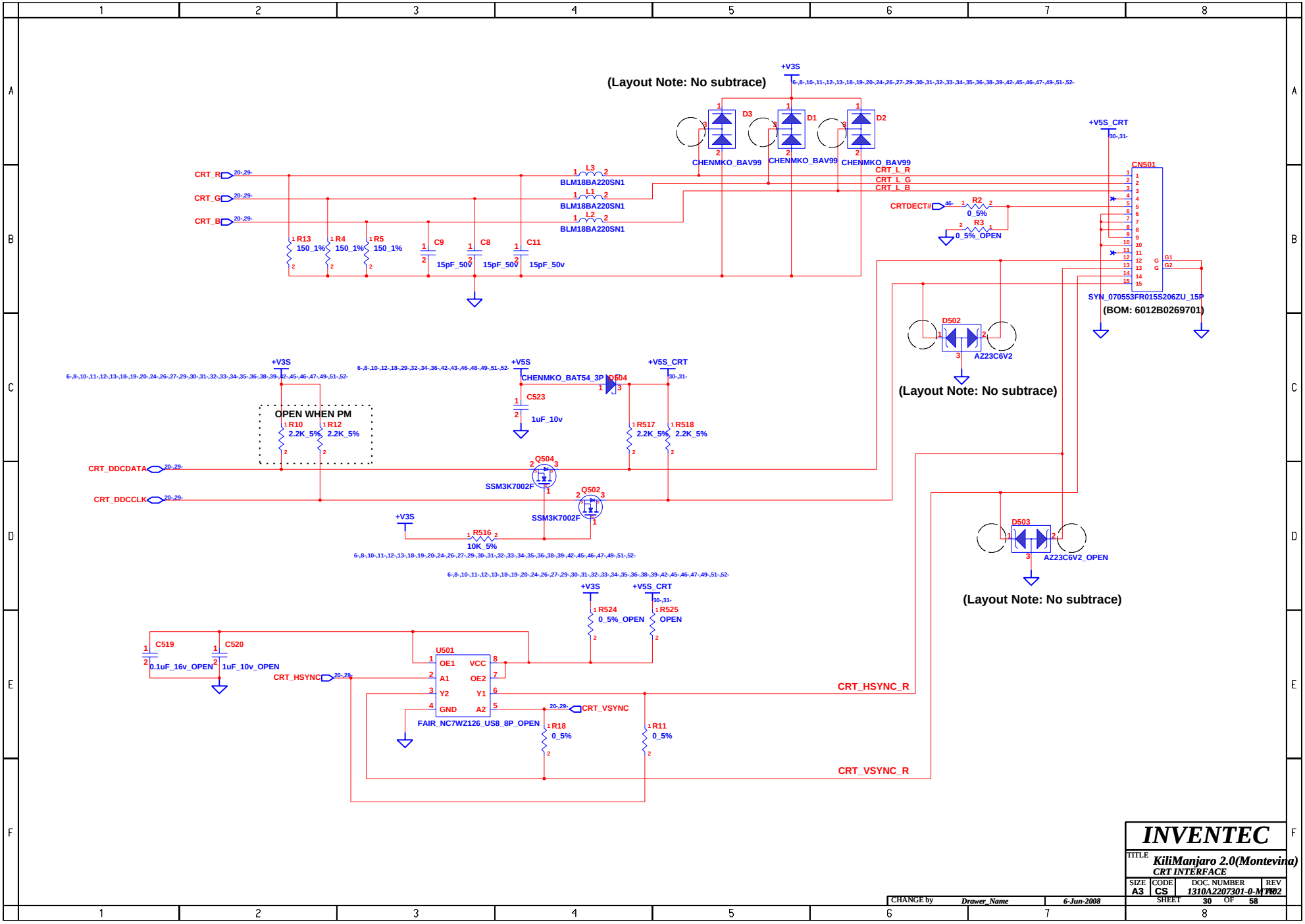

WWW.AliSaler.Com

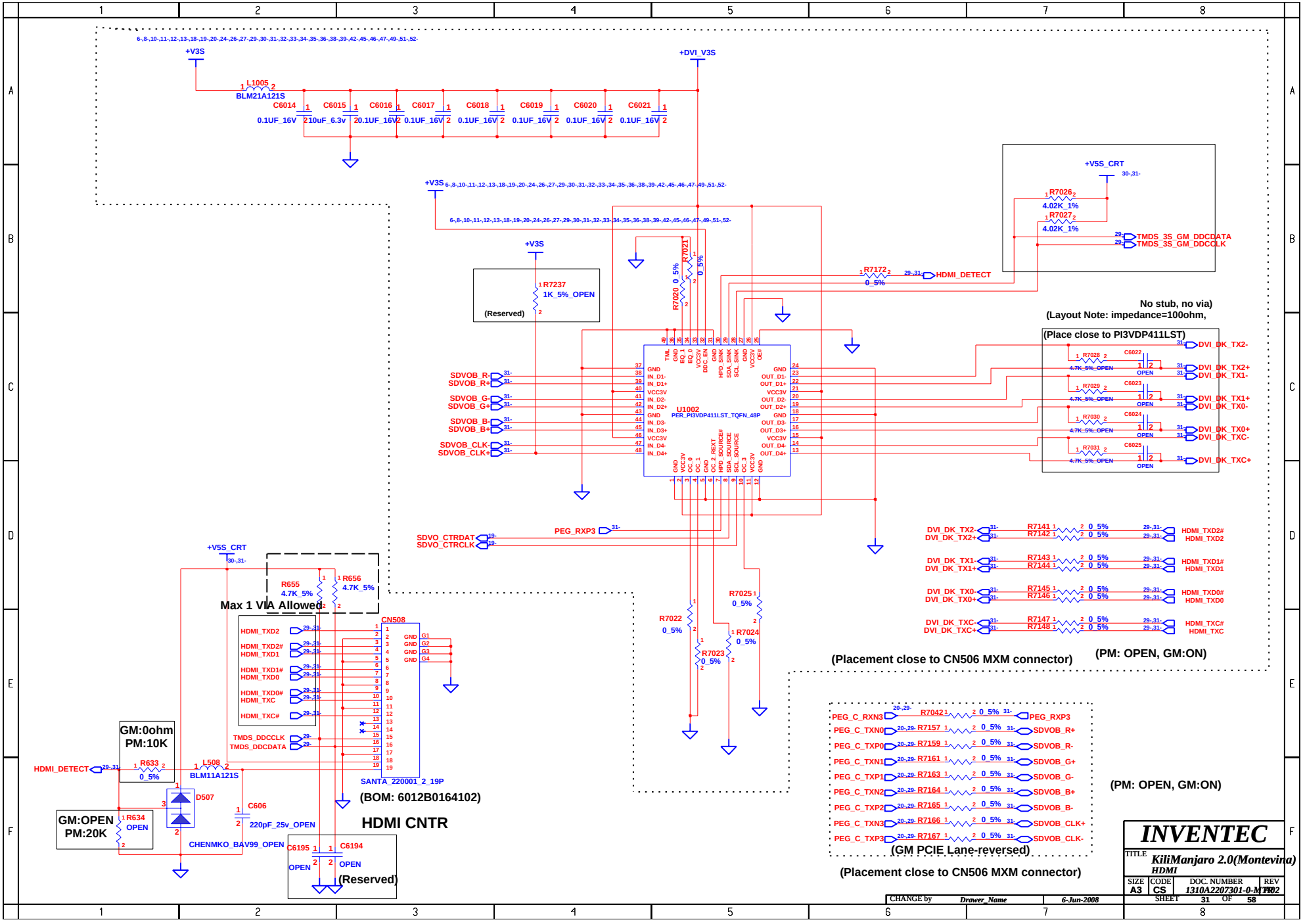
+V3S
+DVI_V3S
L1005
BLM21A121S
C6014 0.1UF_16V
C6015 10uF_6.3V
C6016 0.1UF_16V
C6017 0.1UF_16V
C6018 0.1UF_16V
C6019 0.1UF_16V
C6020 0.1UF_16V
C6021 0.1UF_16V
+V5S_CRT
R7026 4.02K_1%
R7027 4.02K_1%
TMDS_3S_GM_DDCDATA
TMDS_3S_GM_DDCCLK
R7172 0_5%
HDMI_DETECT
R7237 1K_5%_OPEN
(Reserved)
R7021 0_5%
R7020 0_5%
U1002
PER_PI3VDP411LST_TQFN_48P
SDVOB_R-
SDVOB_R+
SDVOB_G-
SDVOB_G+
SDVOB_B-
SDVOB_B+
SDVOB_CLK-
SDVOB_CLK+
No stub, no via)
(Layout Note: impedance=100ohm,
(Place close to PI3VDP411LST)
DVI_DK_TX2-
DVI_DK_TX2+
DVI_DK_TX1-
DVI_DK_TX1+
DVI_DK_TX0-
DVI_DK_TX0+
DVI_DK_TXC-
DVI_DK_TXC+
C6022 OPEN
C6023 OPEN
C6024 OPEN
C6025 OPEN
R7028 4.7K_5%_OPEN
R7029 4.7K_5%_OPEN
R7030 4.7K_5%_OPEN
R7031 4.7K_5%_OPEN
PEG_RXP3
SDVO_CTRDAT
SDVO_CTRCLK
R7022 0_5%
R7023 0_5%
R7024 0_5%
R7025 0_5%
R7141 0_5%
R7142 0_5%
R7143 0_5%
R7144 0_5%
R7145 0_5%
R7146 0_5%
R7147 0_5%
R7148 0_5%
HDMI_TXD2#
HDMI_TXD2
HDMI_TXD1#
HDMI_TXD1
HDMI_TXD0#
HDMI_TXD0
HDMI_TXC#
HDMI_TXC
(Placement close to CN506 MXM connector)
(PM: OPEN, GM:ON)
+V5S_CRT
R655 4.7K_5%
R656 4.7K_5%
Max 1 VIA Allowed
CN508
HDMI_TXD2
HDMI_TXD2#
HDMI_TXD1
HDMI_TXD1#
HDMI_TXD0
HDMI_TXD0#
HDMI_TXC
HDMI_TXC#
TMDS_DDCCLK
TMDS_DDCDATA
SANTA_220001_2_19P
(BOM: 6012B0164102)
HDMI CNTR
GM:0ohm
PM:10K
R633 0_5%
HDMI_DETECT
L508 BLM11A121S
D507
CHENMKO_BAV99_OPEN
C606 220pF_25v_OPEN
GM:OPEN
PM:20K
R634 OPEN
C6195 OPEN
C6194 OPEN
(Reserved)
PEG_C_RXN3
PEG_C_TXN0
PEG_C_TXP0
PEG_C_TXN1
PEG_C_TXP1
PEG_C_TXN2
PEG_C_TXP2
PEG_C_TXN3
PEG_C_TXP3
R7042 0_5%
R7157 0_5%
R7159 0_5%
R7161 0_5%
R7163 0_5%
R7164 0_5%
R7165 0_5%
R7166 0_5%
R7167 0_5%
PEG_RXP3
SDVOB_R+
SDVOB_R-
SDVOB_G+
SDVOB_G-
SDVOB_B+
SDVOB_B-
SDVOB_CLK+
SDVOB_CLK-
(GM PCIE Lane-reversed)
(Placement close to CN506 MXM connector)
(PM: OPEN, GM:ON)
INVENTEC
TITLE KiliManjaro 2.0(Montevina)
HDMI
SIZE A3
CODE CS
DOC. NUMBER 1310A2207301-0-M/B
REV 02
SHEET 31 OF 58
CHANGE by Drawer_Name
6-Jun-2008

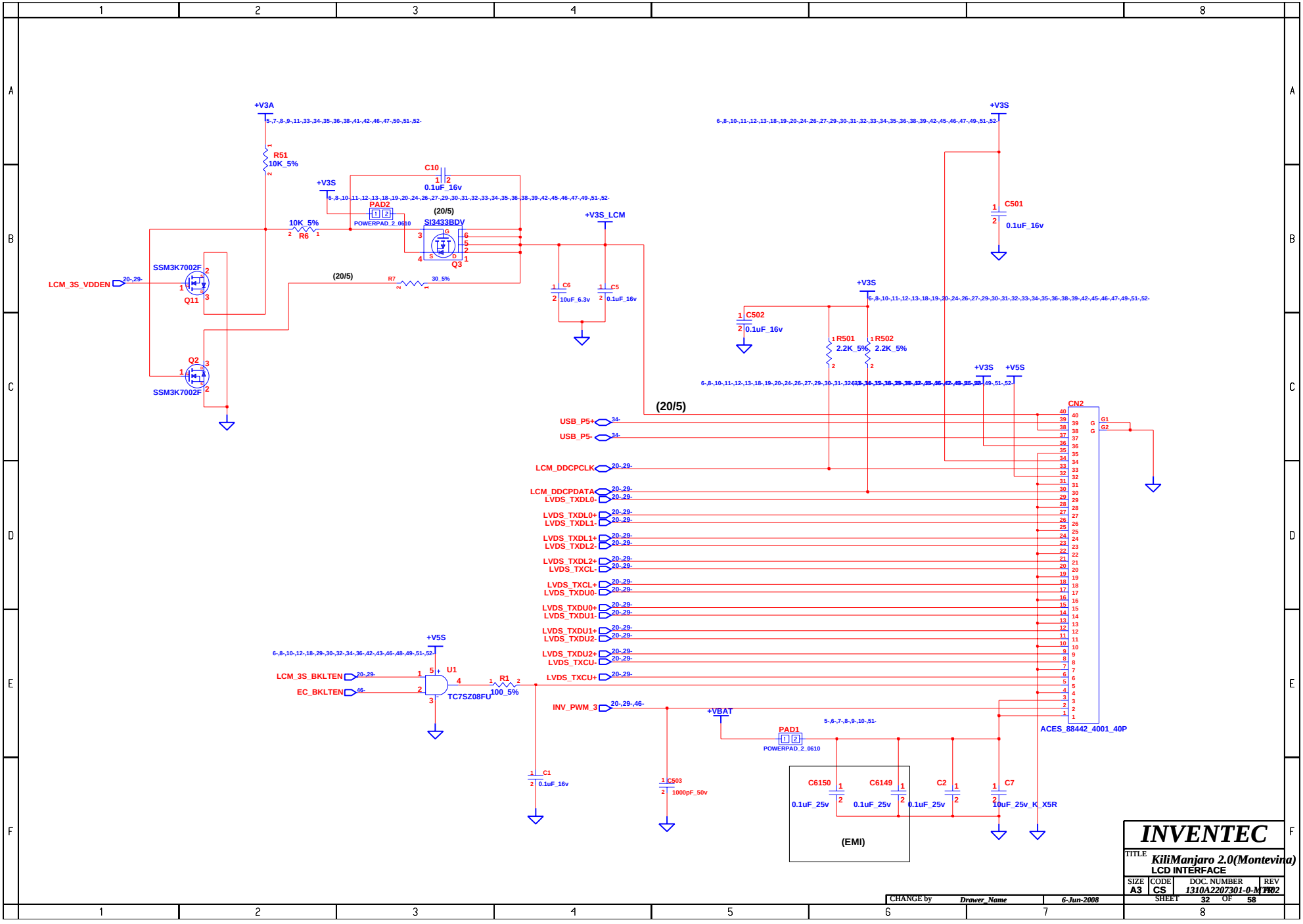

INVENTEC

TITLE: *KiliManjaro 2.0(Montevina)*
LCD INTERFACE

SIZE	CODE	DOC. NUMBER	REV
A3	CS	1310A2207301-0-M1	02

SHEET 32 OF 58

CHANGE by *Drawer_Name* 6-Jun-2008

WWW.AliSaler.Com

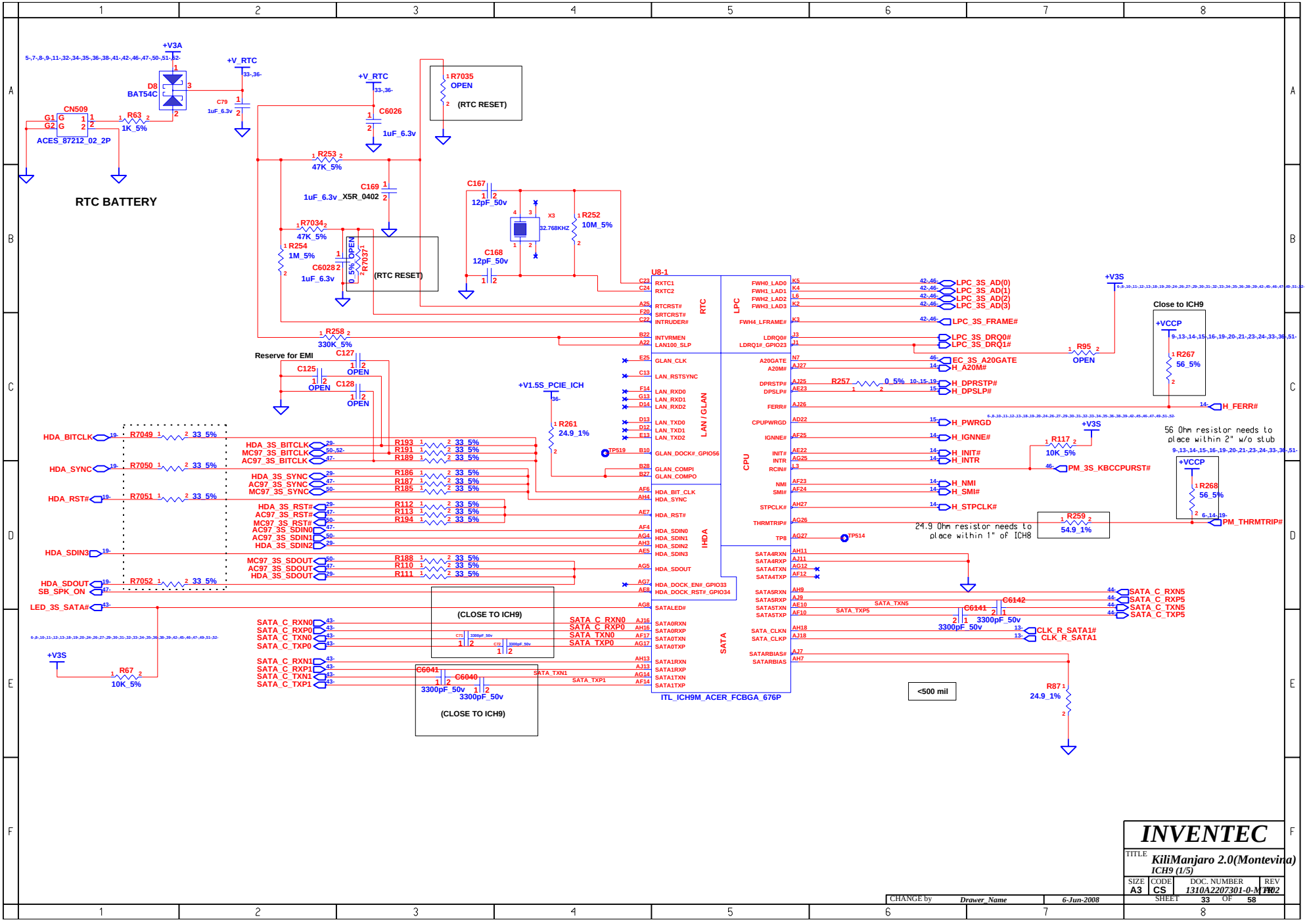

INVENTEC

TITLE KiliManjaro 2.0(Montevina) ICH9 (1/5)

SIZE	CODE	DOC. NUMBER	REV
A3	CS	1310A2207301-0-MT02	0.02

SHEET 33 OF 58

CHANGE by Drawer_Name 6-Jun-2008

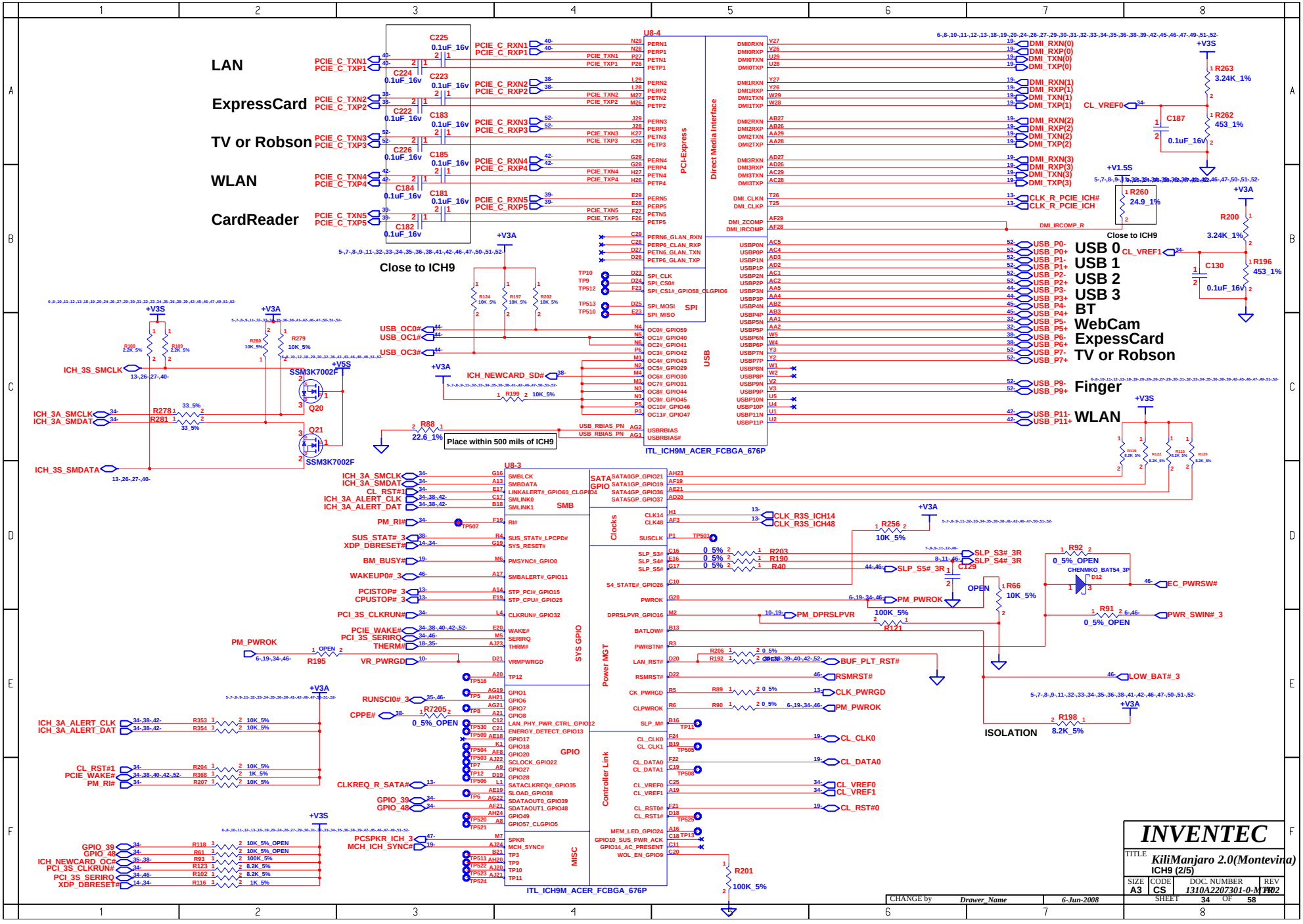

WWW.AliSaler.Com

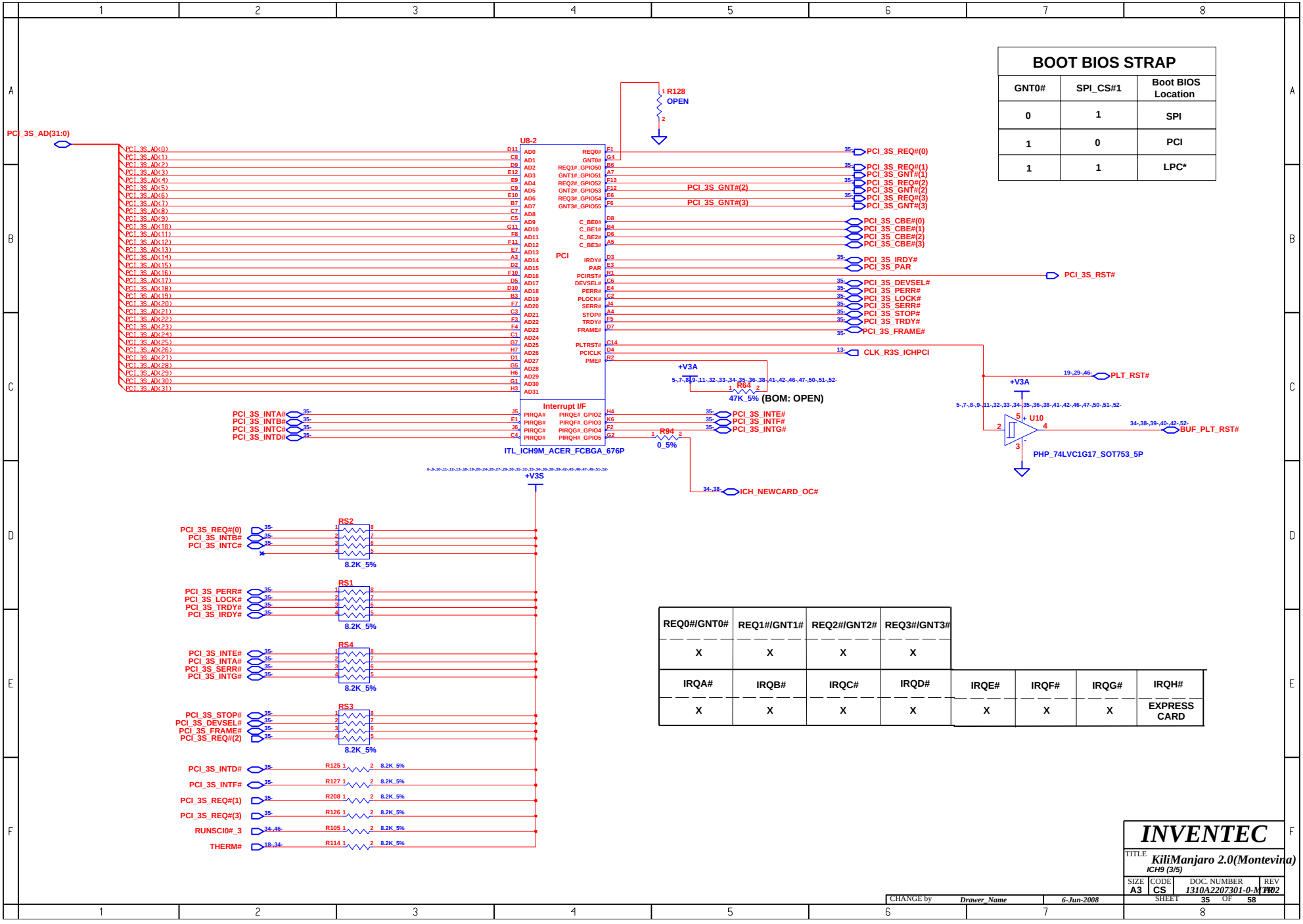

BOOT BIOS STRAP

GNT0#	SPI_CS#1	Boot BIOS Location
0	1	SPI
1	0	PCI
1	1	LPC*

REQ0#/GNT0#	REQ1#/GNT1#	REQ2#/GNT2#	REQ3#/GNT3#
X	X	X	X

IRQA#	IRQB#	IRQC#	IRQD#	IRQE#	IRQF#	IRQG#	IRQH#
X	X	X	X	X	X	X	EXPRESS CARD

INVENTEC

TITLE *KiliManjaro 2.0(Montevina)*
ICH9 (3/5)

SIZE	CODE	DOC. NUMBER	REV
A3	CS	1310A2207301-0-M/B	02

SHEET 35 OF 58

CHANGE by *Drawer_Name* *6-Jun-2008*

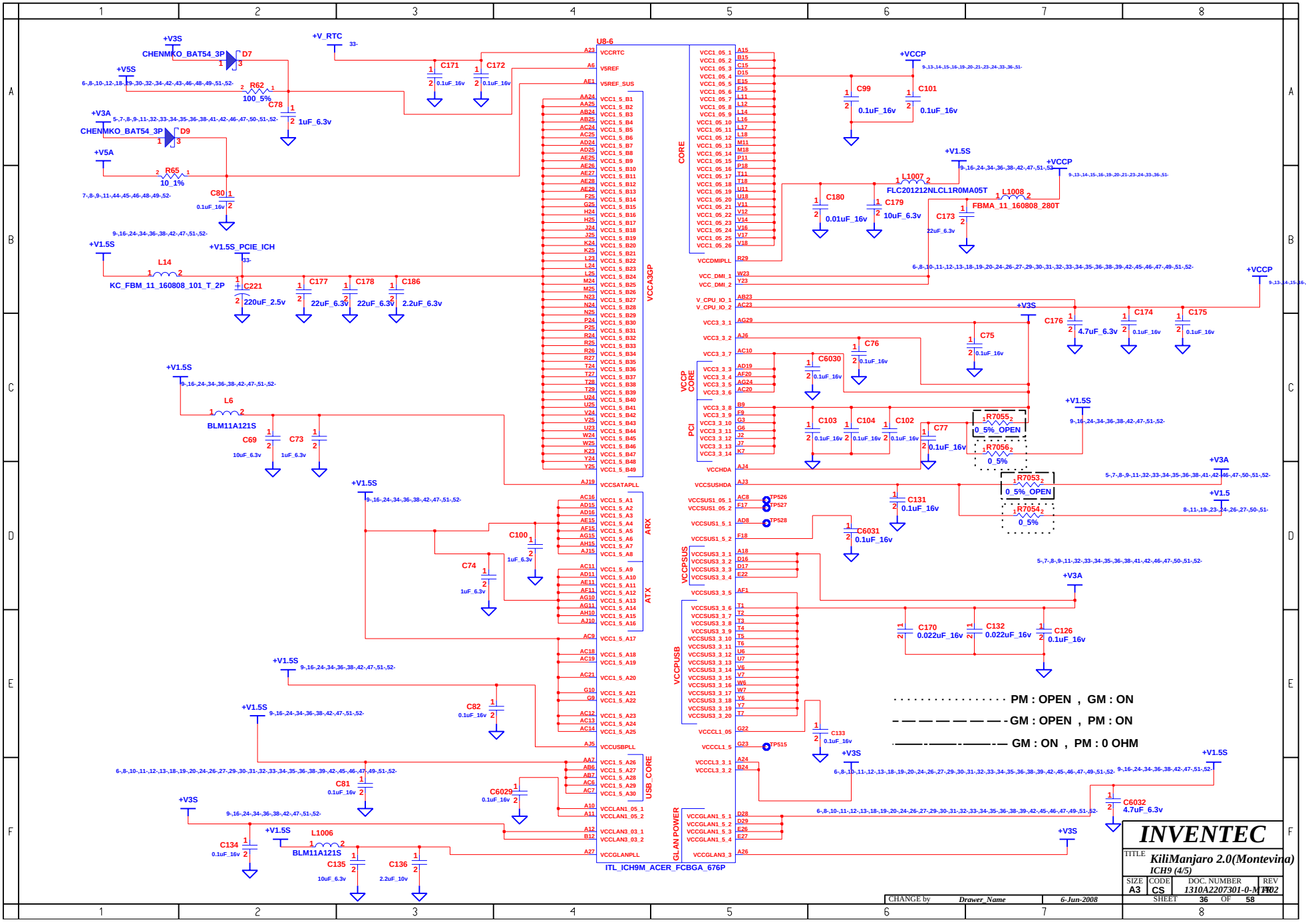

WWW.AliSaler.Com

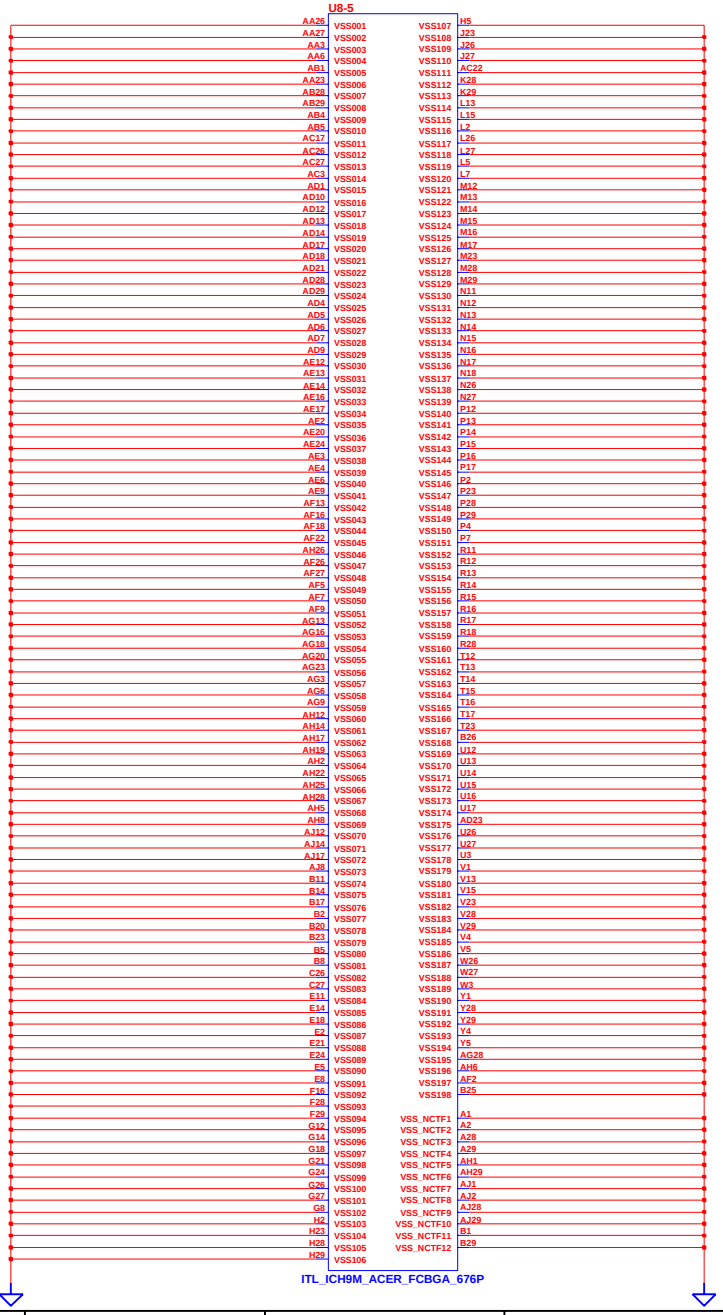

CHANGE by	Drawer_Name	6-Jun-2008	

INVENTEC

TITLE *KiliManjaro 2.0(Montevina)*
ICH9 (5/5)

SIZE	CODE	DOC. NUMBER	REV
A3	CS	1310A2207301-0-MT02	1.0

SHEET 37 OF 58

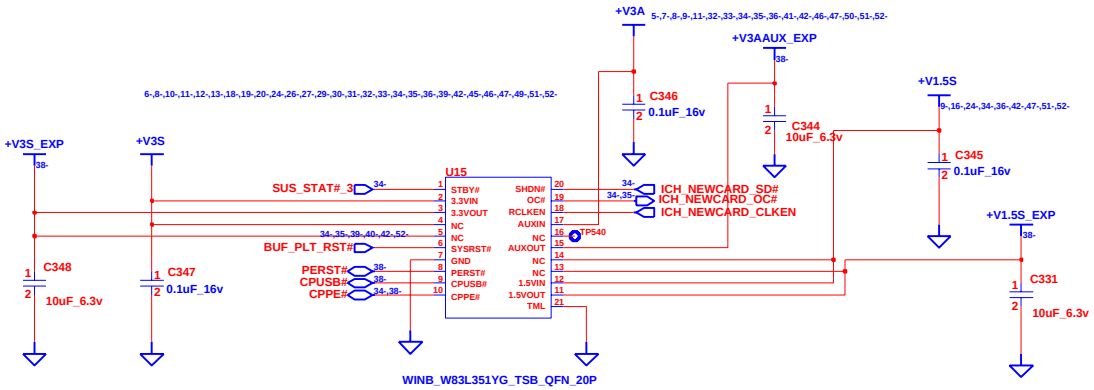

GMT 2nd source: pin 4: +V3S
pin 5: +V3S_EXP
pin 14: +V1.5S
pin 13: +V1.5S_EXP

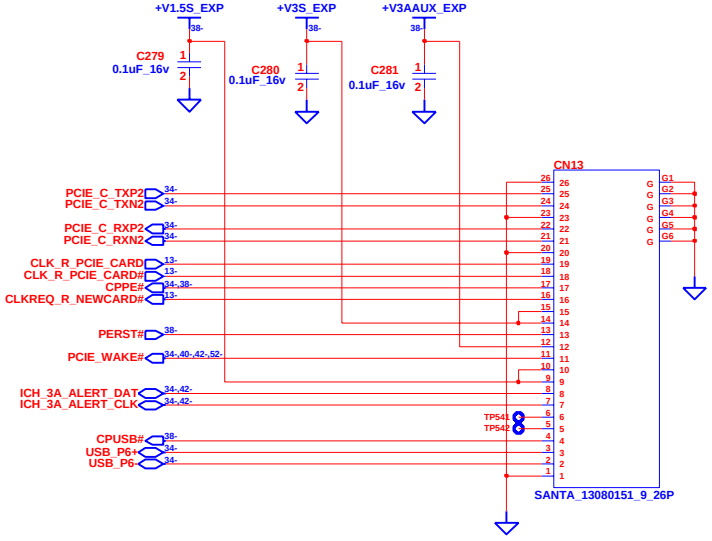

CHANGE by	Drawer_Name	6-Jun-2008	

INVENTEC

TITLE: *KiliManjaro 2.0(Montevina)*
EXPRESS CARD

SIZE	CODE	DOC. NUMBER	REV
A3	CS	1310A2207301-0-M1-02	1.0

SHEET 38 OF 58

WWW.AliSaler.Com

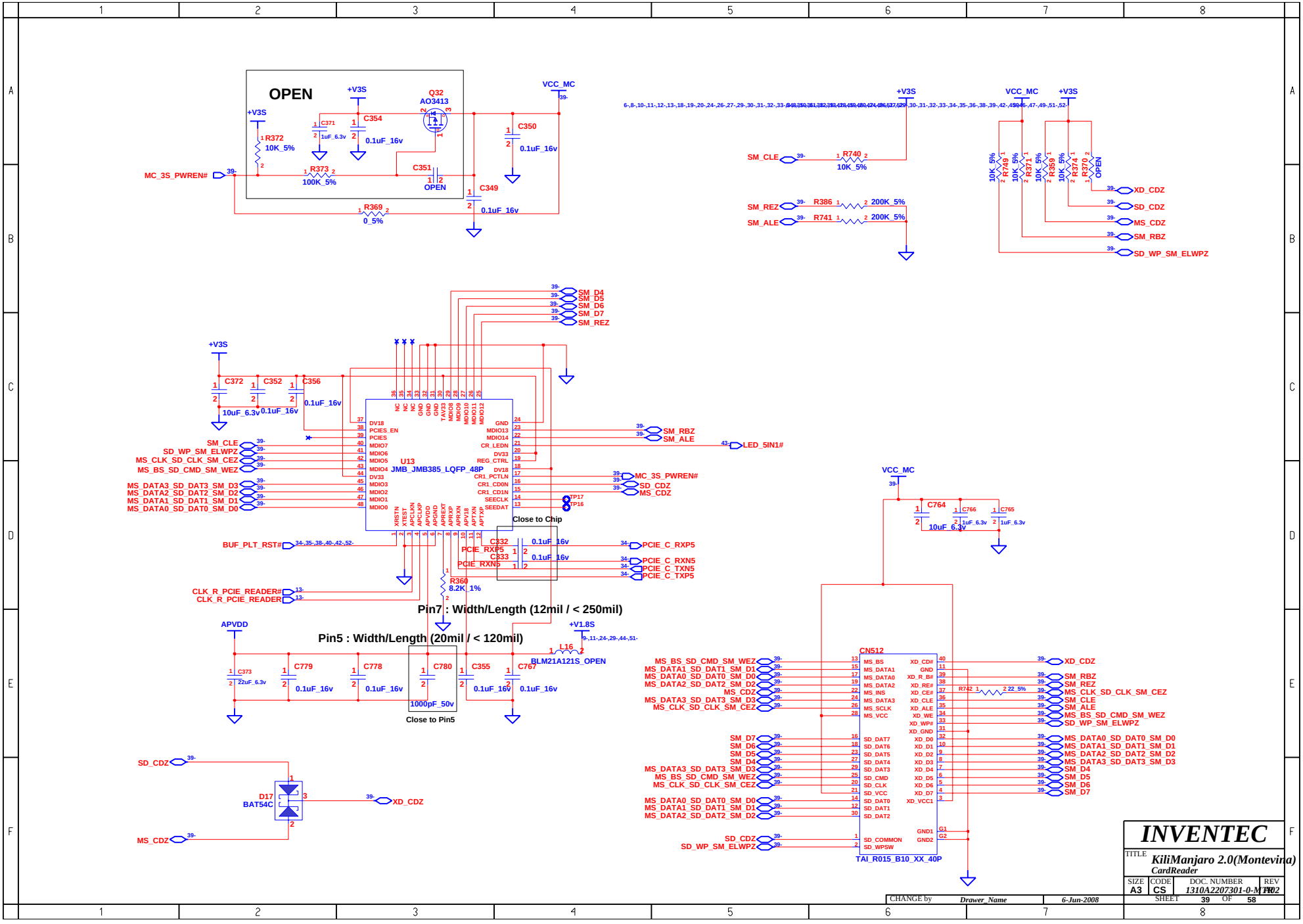
OPEN
+V3S
Q32
AO3413
VCC_MC
R372
10K_5%
C371
1uF_6.3v
C354
0.1uF_16v
C350
0.1uF_16v
MC_3S_PWREN#
R373
100K_5%
C351
OPEN
C349
0.1uF_16v
R369
0_5%
SM_CLE
R740
10K_5%
SM_REZ
R386
200K_5%
SM_ALE
R741
200K_5%
R749
R371
R369
R374
R370
OPEN
XD_CDZ
SD_CDZ
MS_CDZ
SM_RBZ
SD_WP_SM_ELWPZ
SM_D4
SM_D5
SM_D6
SM_D7
SM_REZ
C372
C352
C356
10uF_6.3v
0.1uF_16v
0.1uF_16v
U13
JMB_JMB385_LQFP_48P
SM_RBZ
SM_ALE
LED_5IN1#
SM_CLE
SD_WP_SM_ELWPZ
MS_CLK_SD_CLK_SM_CEZ
MS_BS_SD_CMD_SM_WEZ
MS_DATA3_SD_DAT3_SM_D3
MS_DATA2_SD_DAT2_SM_D2
MS_DATA1_SD_DAT1_SM_D1
MS_DATA0_SD_DAT0_SM_D0
MC_3S_PWREN#
SD_CDZ
MS_CDZ
TP17
TP16
Close to Chip
BUF_PLT_RST#
C332
C333
PCIE_RXP5
PCIE_RXN5
PCIE_C_RXP5
PCIE_C_RXN5
PCIE_C_TXN5
PCIE_C_TXP5
CLK_R_PCIE_READER#
CLK_R_PCIE_READER
R360
8.2K_1%
Pin7 : Width/Length (12mil / < 250mil)
Pin5 : Width/Length (20mil / < 120mil)
APVDD
+V1.8S
L16
BLM21A121S_OPEN
C373
22uF_6.3v
C779
0.1uF_16v
C778
0.1uF_16v
C780
1000pF_50v
Close to Pin5
C355
0.1uF_16v
C767
0.1uF_16v
SD_CDZ
D17
BAT54C
XD_CDZ
MS_CDZ
VCC_MC
C764
10uF_6.3v
C766
1uF_6.3v
C765
1uF_6.3v
CN512
TAI_R015_B10_XX_40P
R742
22_5%
MS_BS_SD_CMD_SM_WEZ
MS_DATA1_SD_DAT1_SM_D1
MS_DATA0_SD_DAT0_SM_D0
MS_DATA2_SD_DAT2_SM_D2
MS_CDZ
MS_DATA3_SD_DAT3_SM_D3
MS_CLK_SD_CLK_SM_CEZ
SM_D7
SM_D6
SM_D5
SM_D4
MS_DATA3_SD_DAT3_SM_D3
MS_BS_SD_CMD_SM_WEZ
MS_CLK_SD_CLK_SM_CEZ
MS_DATA0_SD_DAT0_SM_D0
MS_DATA1_SD_DAT1_SM_D1
MS_DATA2_SD_DAT2_SM_D2
SD_CDZ
SD_WP_SM_ELWPZ
XD_CDZ
SM_RBZ
SM_REZ
MS_CLK_SD_CLK_SM_CEZ
SM_CLE
SM_ALE
MS_BS_SD_CMD_SM_WEZ
SD_WP_SM_ELWPZ
MS_DATA0_SD_DAT0_SM_D0
MS_DATA1_SD_DAT1_SM_D1
MS_DATA2_SD_DAT2_SM_D2
MS_DATA3_SD_DAT3_SM_D3
SM_D4
SM_D5
SM_D6
SM_D7
INVENTEC
TITLE
KiliManjaro 2.0(Montevina)
CardReader
SIZE A3
CODE CS
DOC. NUMBER 1310A2207301-0-M1
REV 02
SHEET 39 OF 58
CHANGE by Drawer_Name
6-Jun-2008

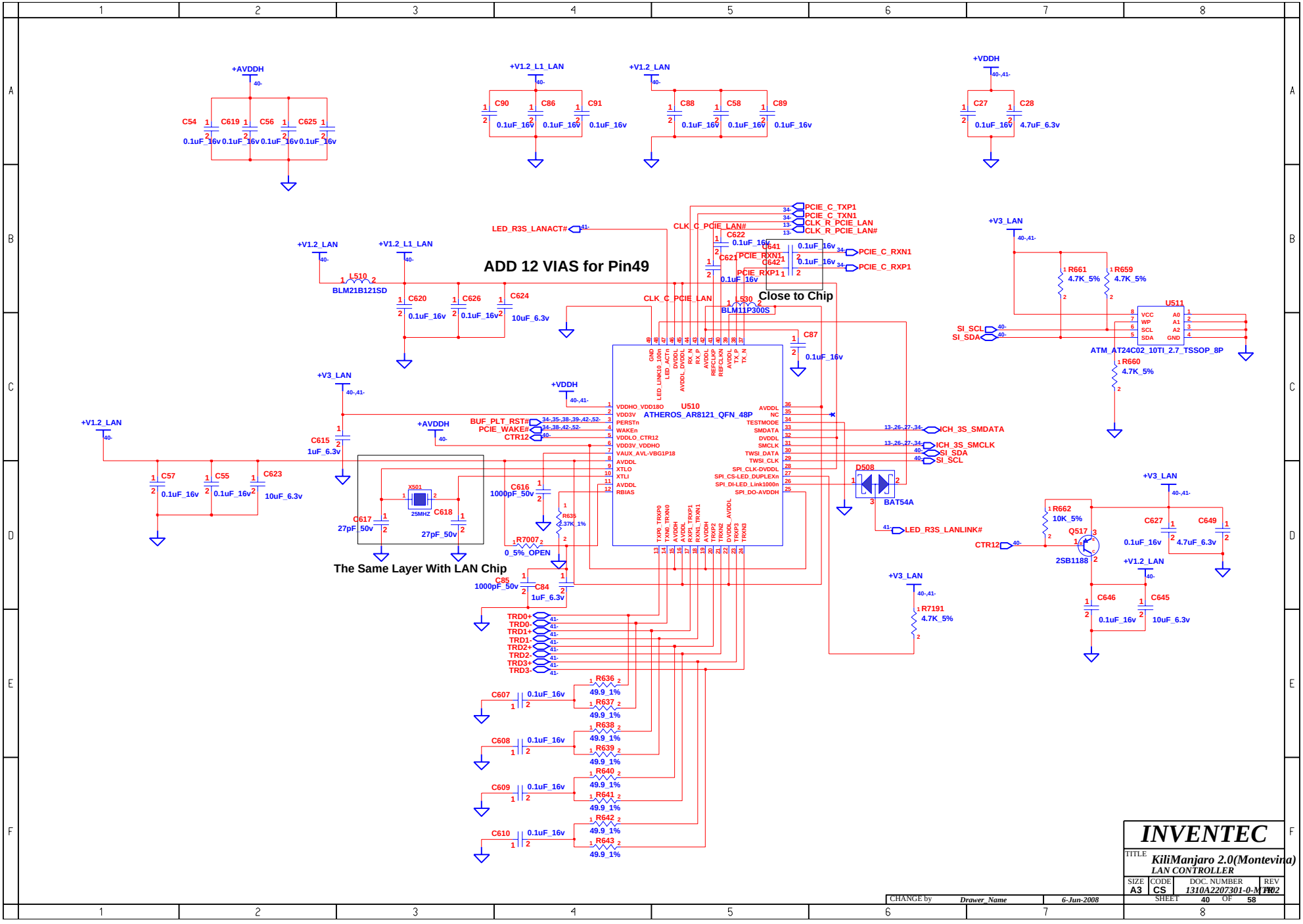

WWW.AliSaler.Com

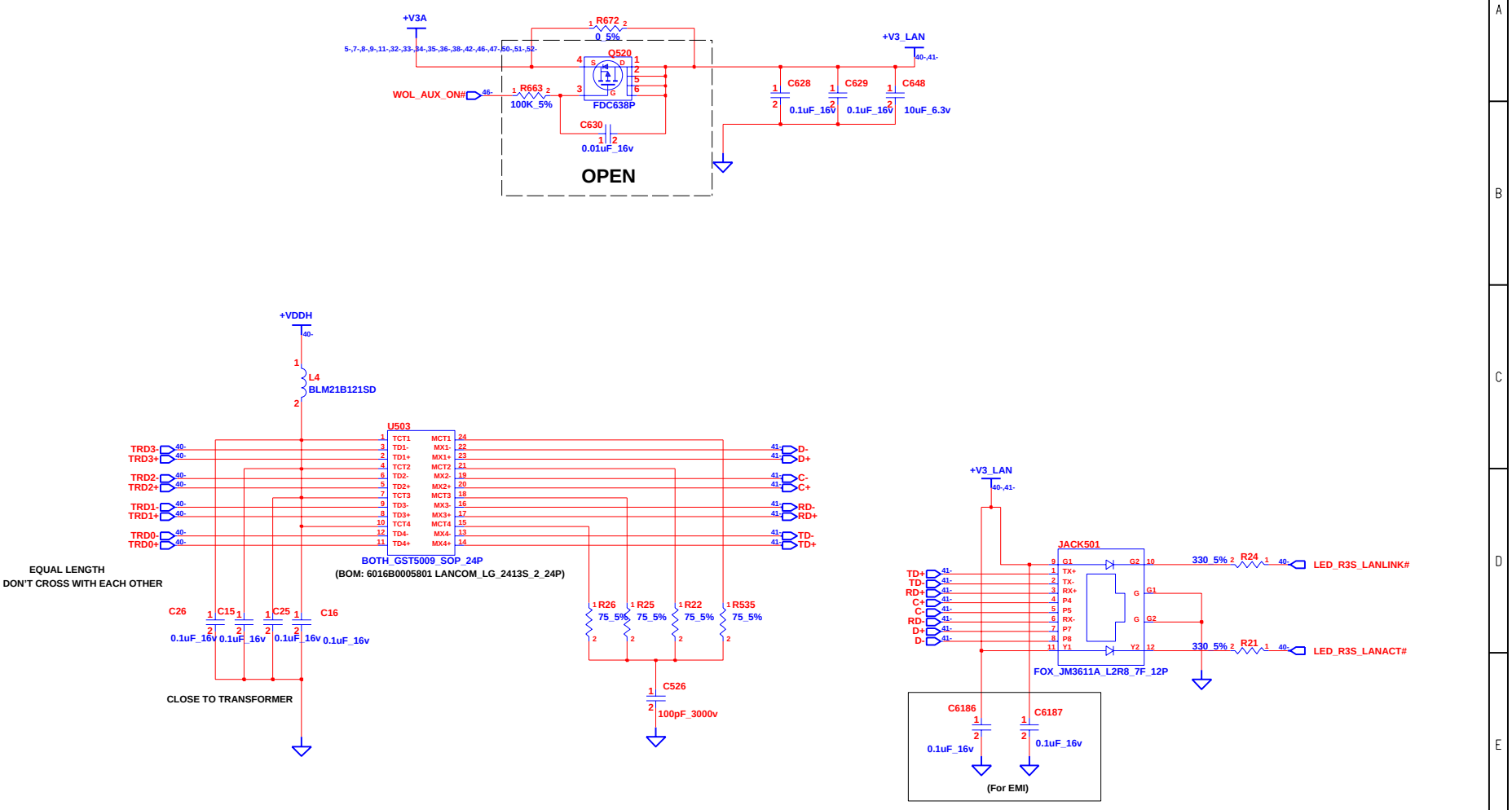

INVENTEC

TITLE KiliManjaro 2.0(Montevina) RJ45 CONN

SIZE	CODE	DOC. NUMBER	REV
A3	CS	1310A2207301-0-M1002	10

SHEET 41 OF 58

CHANGE by Drawer_Name 6-Jun-2008

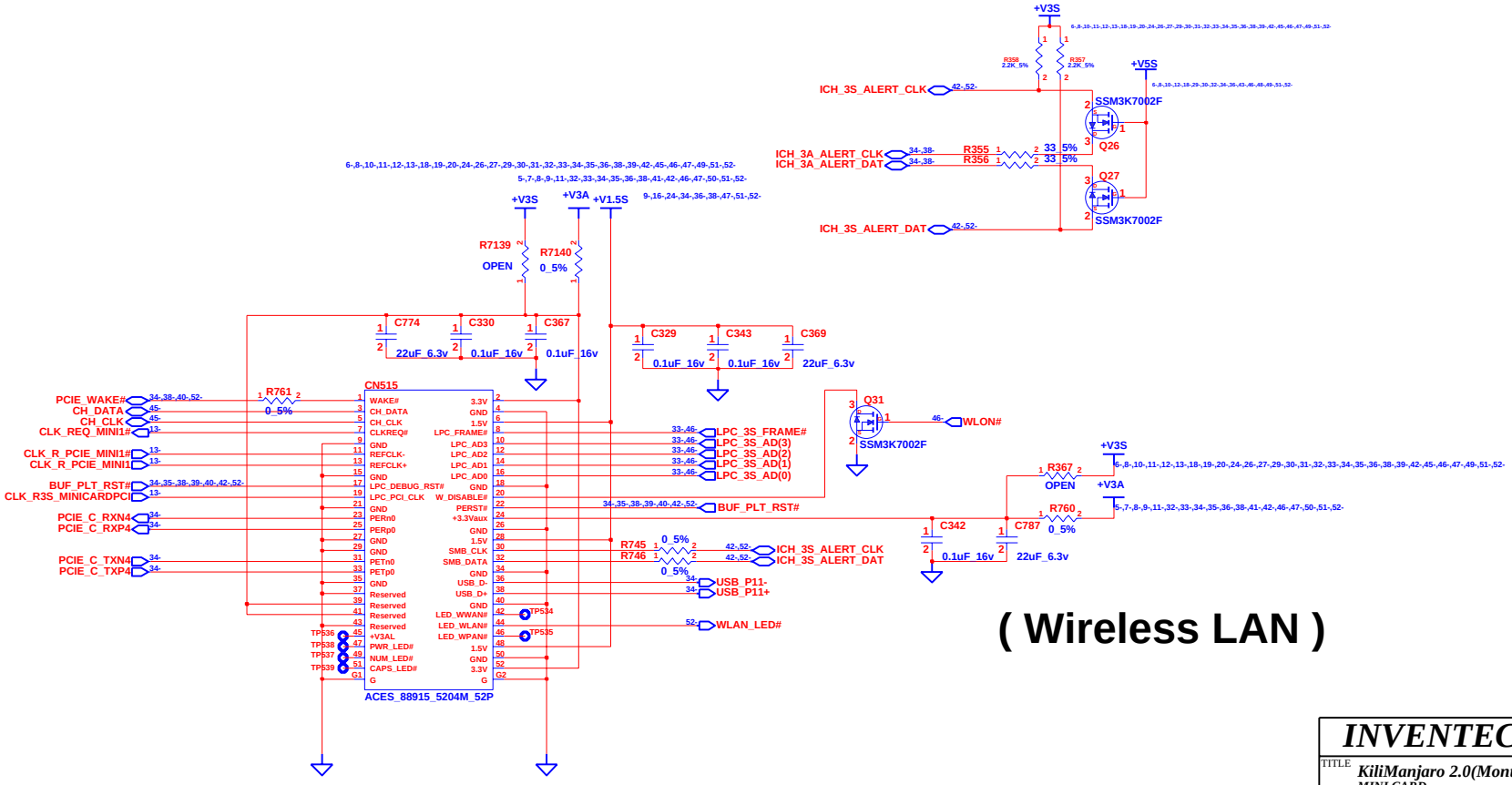

INVENTEC			
TITLE	KiliManjaro 2.0(Montevina) MINI CARD		
SIZE A3	CODE CS	DOC. NUMBER 1310A2207301-0-M1-02	REV
		SHEET 42 OF 58	

CHANGE by Drawer_Name 6-Jun-2008

WWW.AliSaler.Com

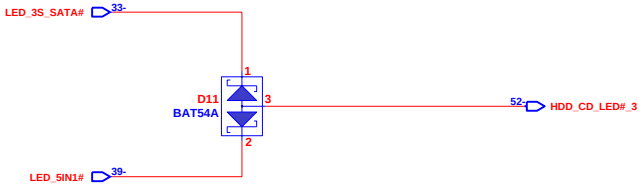

HDD

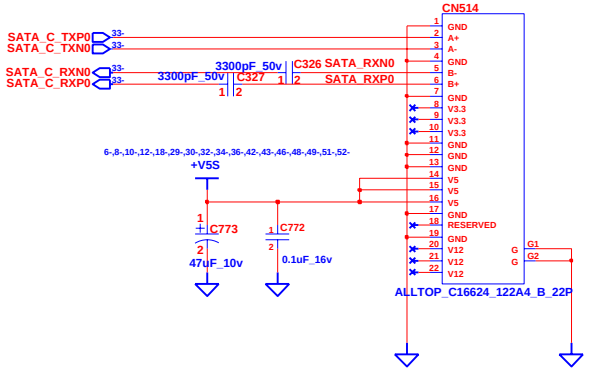

ODD

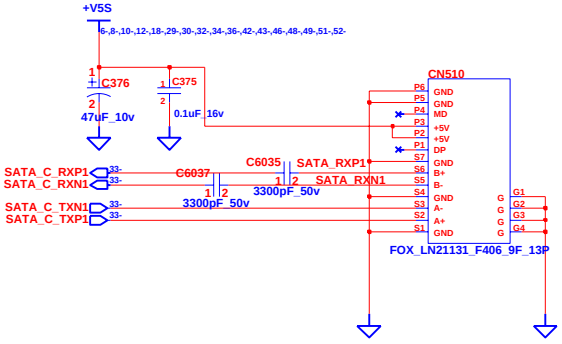

SATA ODD CONN

CHANGE by	Drawer_Name	6-Jun-2008	

INVENTEC

TITLE *KiliManjaro 2.0(Montevina)*
ODD & HDD CONN

SIZE	CODE	DOC. NUMBER	REV
A3	CS	1310A2207301-0-M1-02	A00

SHEET 43 OF 58

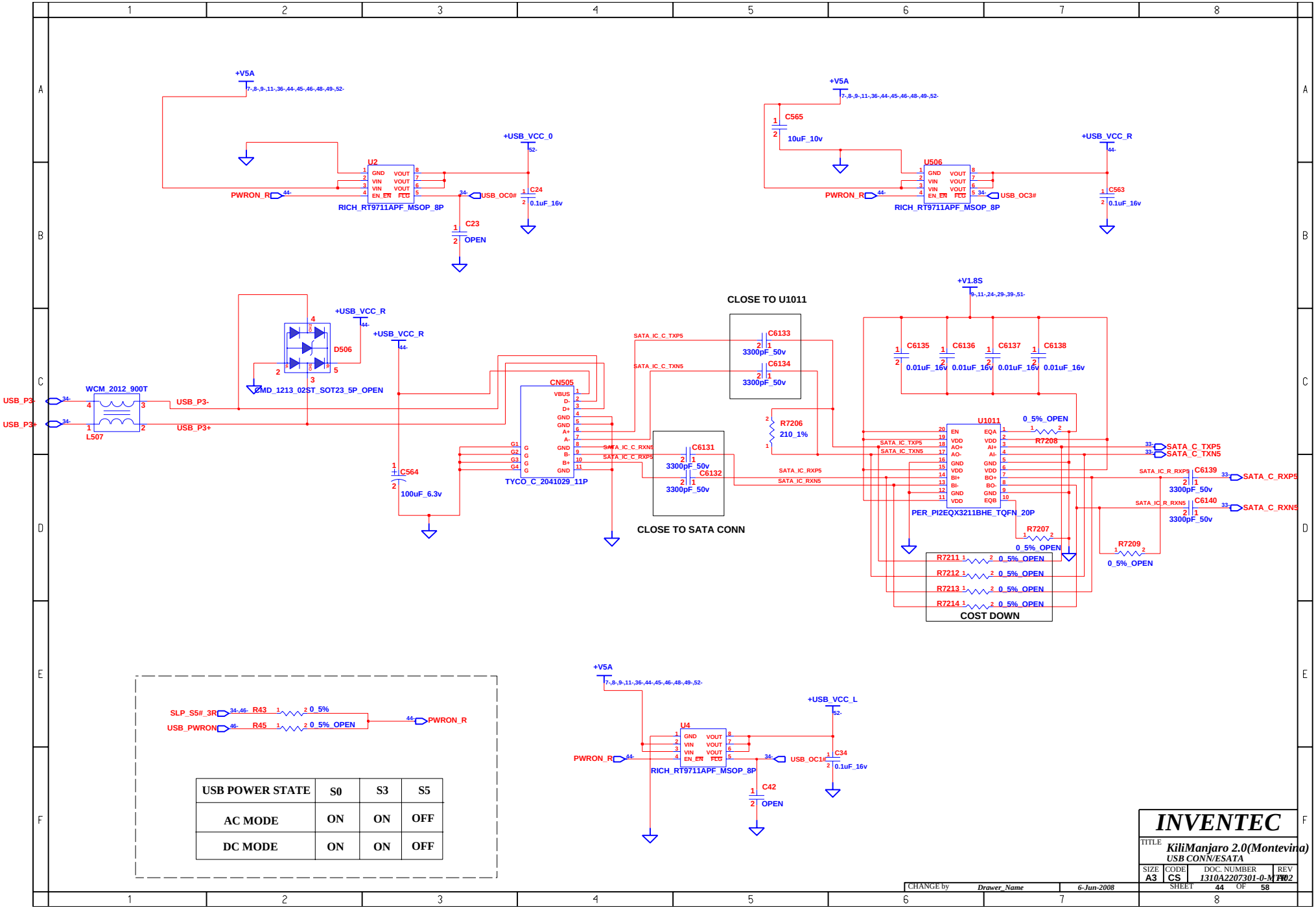

USB POWER STATE	S0	S3	S5
AC MODE	ON	ON	OFF
DC MODE	ON	ON	OFF

WWW.AliSaler.Com

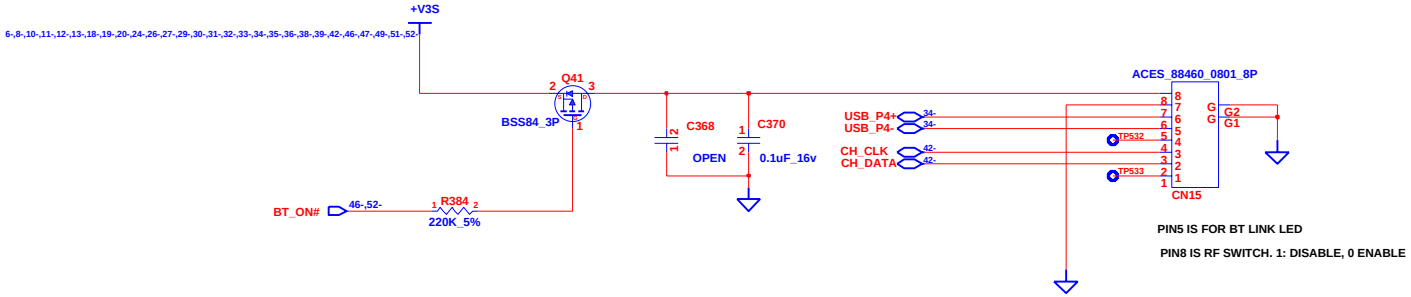

BLUE TOOTH

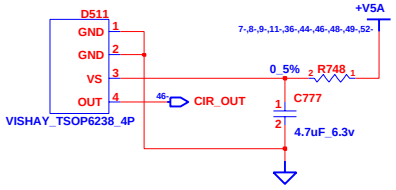

CIR

INVENTEC			
TITLE: KiliManjaro 2.0(Montevina) BLUETOOTH			
SIZE: A3	CODE: CS	DOC. NUMBER: 1310A2207301-0-M/B	REV: 102
CHANGE by: Drawer_Name	6-Jun-2008	SHEET 45 OF 58	

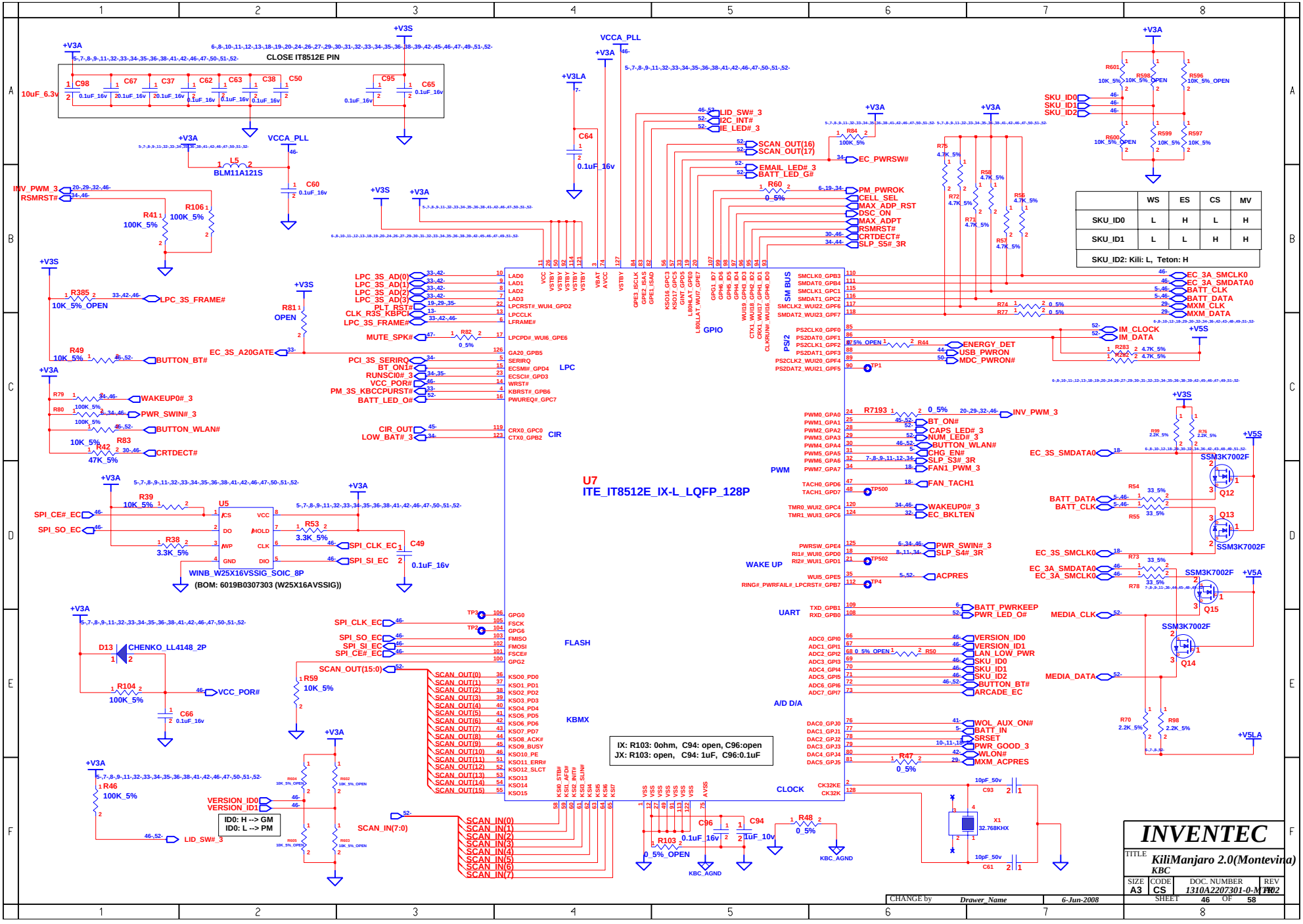

	WS	ES	CS	MV
SKU_ID0	L	H	L	H
SKU_ID1	L	L	H	H

WWW.AliSaler.Com

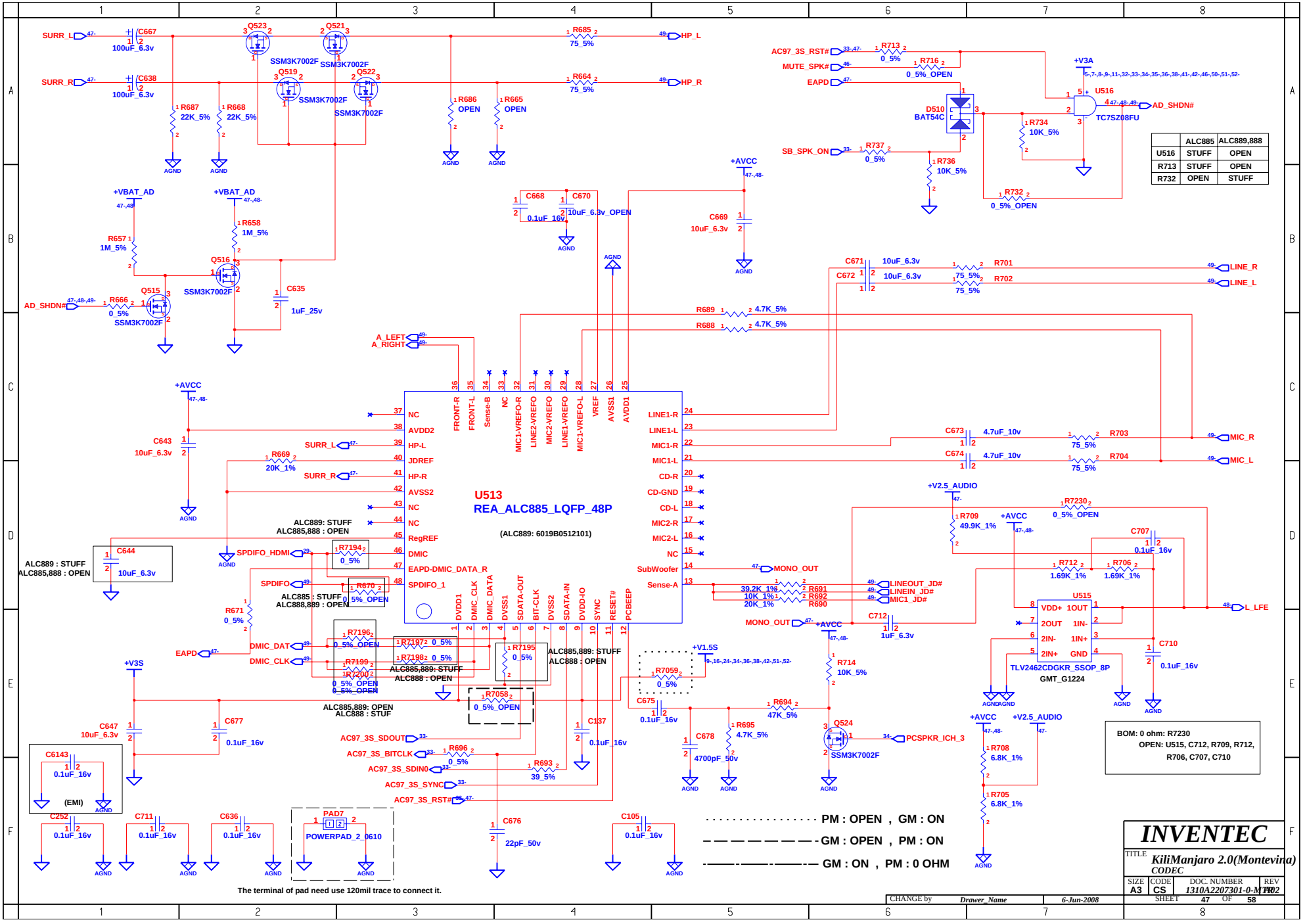

	ALC885	ALC889,888
U516	STUFF	OPEN
R713	STUFF	OPEN
R732	OPEN	STUFF

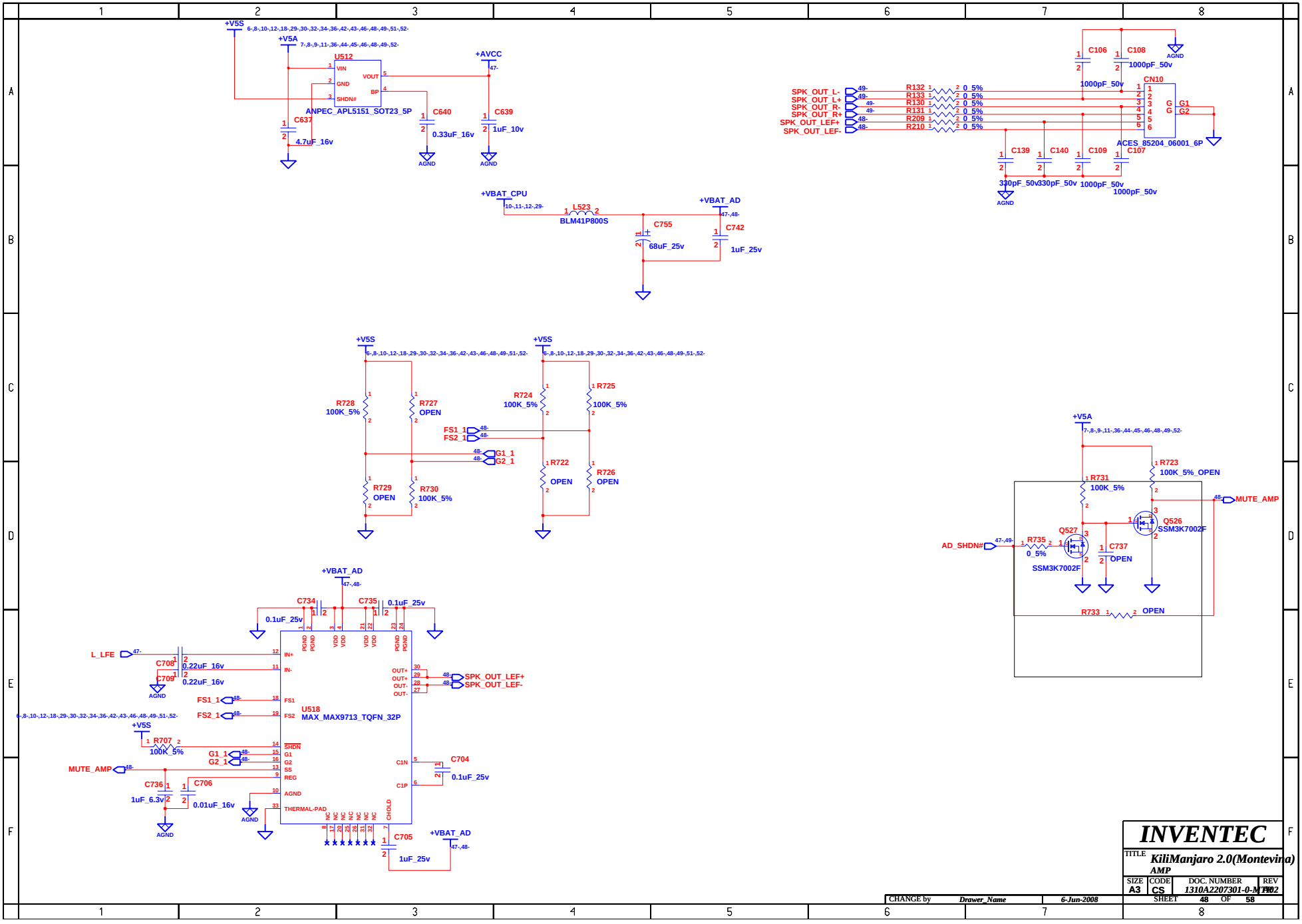

WWW.AliSaler.Com

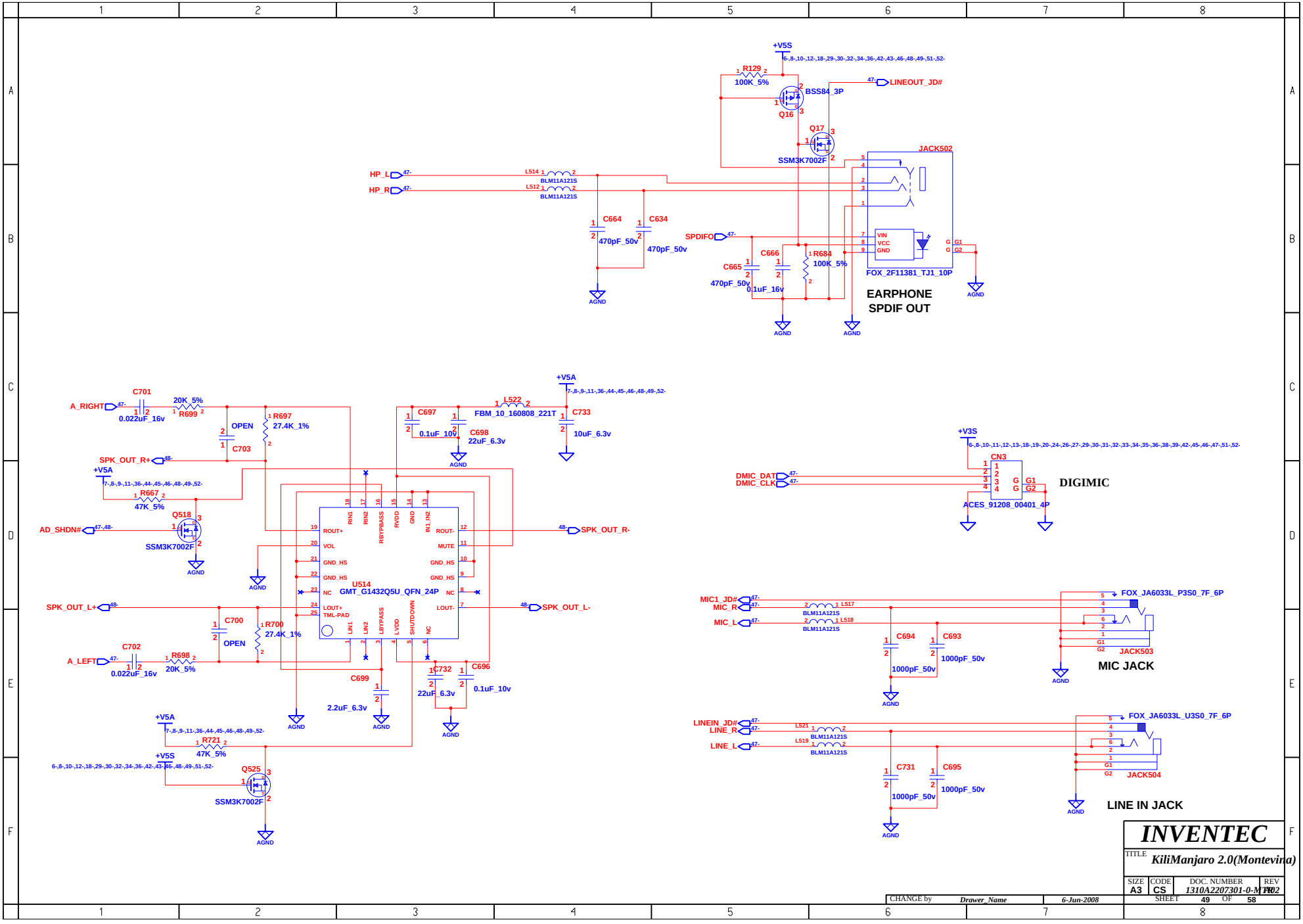
+V5S
R129
100K_5%
BSS84_3P
Q16
LINEOUT_JD#
Q17
SSM3K7002F
JACK502
HP_L
HP_R
L514
L512
BLM11A121S
C664
470pF_50v
C634
470pF_50v
SPDIFO
C666
0.1uF_16v
C665
470pF_50v
R684
100K_5%
VIN
VCC
GND
FOX_2F11381_TJ1_10P
EARPHONE
SPDIF OUT
AGND
+V5A
A_RIGHT
C701
0.022uF_16v
R699
20K_5%
OPEN
C703
R697
27.4K_1%
C697
0.1uF_10v
L522
FBM_10_160808_221T
C698
22uF_6.3v
C733
10uF_6.3v
SPK_OUT_R+
R667
47K_5%
Q518
AD_SHDN#
SSM3K7002F
U514
GMT_G1432Q5U_QFN_24P
ROUT+
VOL
GND_HS
NC
LOUT+
TML-PAD
RIN1
RIN2
RBYPBASS
RVDD
GND
IN1_IN2
ROUT-
MUTE
LOUT-
LIN1
LIN2
LBYPASS
LVDD
SHUTDOWN
SPK_OUT_R-
SPK_OUT_L+
SPK_OUT_L-
C700
OPEN
R700
27.4K_1%
A_LEFT
C702
0.022uF_16v
R698
20K_5%
C699
2.2uF_6.3v
C732
22uF_6.3v
C696
0.1uF_10v
R721
47K_5%
Q525
SSM3K7002F
+V3S
CN3
DMIC_DAT
DMIC_CLK
ACES_91208_00401_4P
DIGIMIC
MIC1_JD#
MIC_R
MIC_L
L517
L518
C694
1000pF_50v
C693
1000pF_50v
FOX_JA6033L_P3S0_7F_6P
JACK503
MIC JACK
LINEIN_JD#
LINE_R
LINE_L
L521
L519
C731
1000pF_50v
C695
1000pF_50v
FOX_JA6033L_U3S0_7F_6P
JACK504
LINE IN JACK
INVENTEC
TITLE
KiliManjaro 2.0(Montevina)
SIZE A3
CODE CS
DOC. NUMBER 1310A2207301-0-M1
REV 02
SHEET 49 OF 58
CHANGE by Drawer_Name
6-Jun-2008

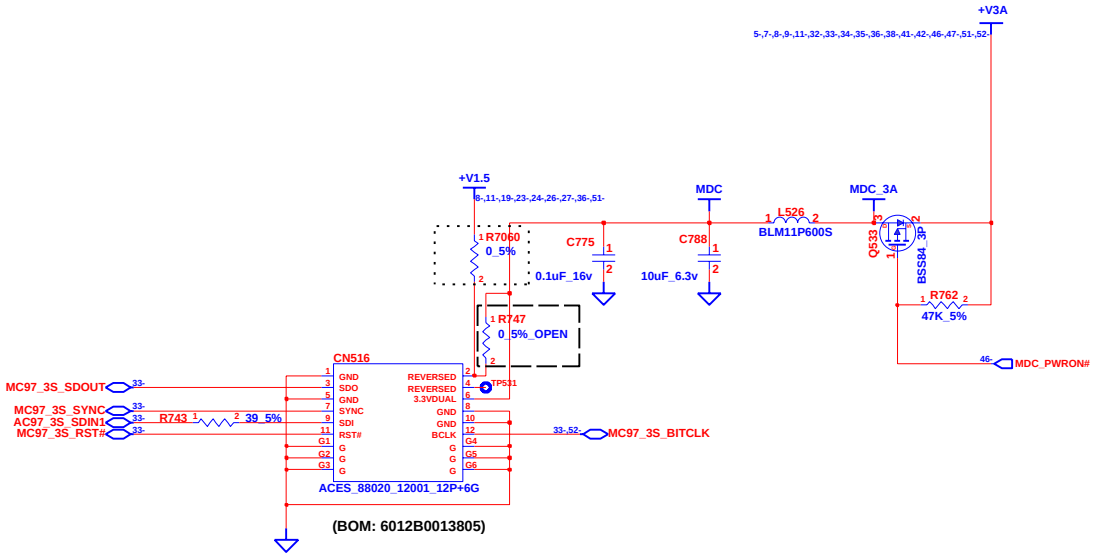

INVENTEC

TITLE KiliManjaro 2.0(Montevina) MDC

SIZE	CODE	DOC. NUMBER	REV
A3	CS	1310A2207301-0-M1-02	1.0

CHANGE by Drawer_Name 6-Jun-2008 SHEET 50 OF 58

WWW.AliSaler.Com

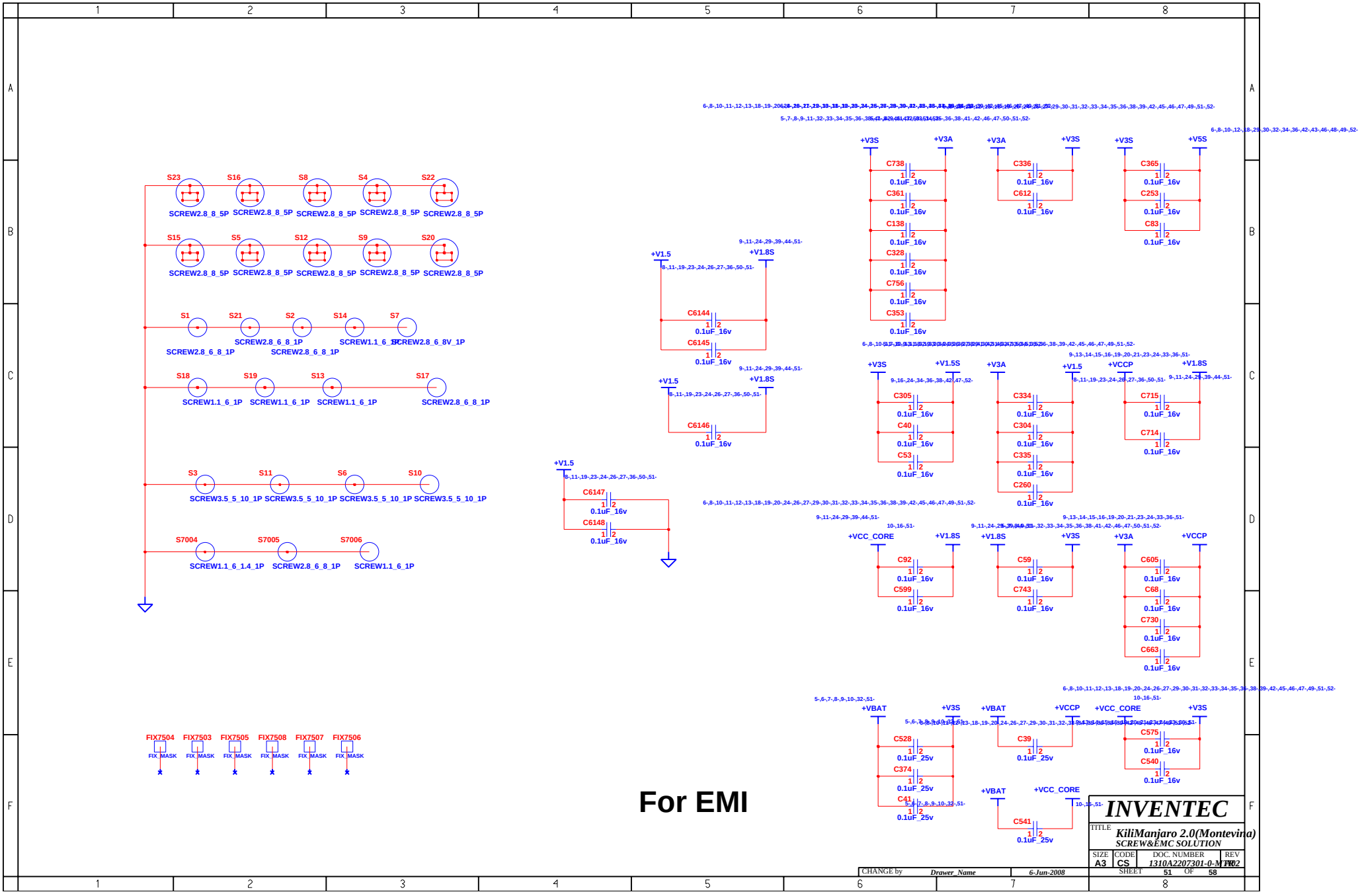
S23 S16 S8 S4 S22
SCREW2.8_8_5P SCREW2.8_8_5P SCREW2.8_8_5P SCREW2.8_8_5P SCREW2.8_8_5P
S15 S5 S12 S9 S20
SCREW2.8_8_5P SCREW2.8_8_5P SCREW2.8_8_5P SCREW2.8_8_5P SCREW2.8_8_5P
S1 S21 S2 S14 S7
SCREW2.8_6_8_1P SCREW2.8_6_8_1P SCREW1.1_6_1P SCREW2.8_6_8V_1P
SCREW2.8_6_8_1P
S18 S19 S13 S17
SCREW1.1_6_1P SCREW1.1_6_1P SCREW1.1_6_1P SCREW2.8_6_8_1P
S3 S11 S6 S10
SCREW3.5_5_10_1P SCREW3.5_5_10_1P SCREW3.5_5_10_1P SCREW3.5_5_10_1P
S7004 S7005 S7006
SCREW1.1_6_1.4_1P SCREW2.8_6_8_1P SCREW1.1_6_1P
FIX7504 FIX7503 FIX7505 FIX7508 FIX7507 FIX7506
FIX_MASK FIX_MASK FIX_MASK FIX_MASK FIX_MASK FIX_MASK
+V1.5
C6147 0.1uF_16v
C6148 0.1uF_16v
+V1.5 +V1.8S
C6144 0.1uF_16v
C6145 0.1uF_16v
+V1.5 +V1.8S
C6146 0.1uF_16v
+V3S +V3A
C738 0.1uF_16v
C361 0.1uF_16v
C138 0.1uF_16v
C328 0.1uF_16v
C756 0.1uF_16v
C353 0.1uF_16v
+V3A +V3S
C336 0.1uF_16v
C612 0.1uF_16v
+V3S +V5S
C365 0.1uF_16v
C253 0.1uF_16v
C83 0.1uF_16v
+V3S +V1.5S
C305 0.1uF_16v
C40 0.1uF_16v
C53 0.1uF_16v
+V3A +V1.5
C334 0.1uF_16v
C304 0.1uF_16v
C335 0.1uF_16v
C260 0.1uF_16v
+VCCP +V1.8S
C715 0.1uF_16v
C714 0.1uF_16v
+VCC_CORE +V1.8S
C92 0.1uF_16v
C599 0.1uF_16v
+V1.8S +V3S
C59 0.1uF_16v
C743 0.1uF_16v
+V3A +VCCP
C605 0.1uF_16v
C68 0.1uF_16v
C730 0.1uF_16v
C663 0.1uF_16v
+VBAT +V3S
C528 0.1uF_25v
C374 0.1uF_25v
C41 0.1uF_25v
+VBAT +VCCP
C39 0.1uF_25v
+VBAT +VCC_CORE
C541 0.1uF_25v
+VCC_CORE +V3S
C575 0.1uF_16v
C540 0.1uF_16v
For EMI
INVENTEC
TITLE KiliManjaro 2.0(Montevina)
SCREW&EMC SOLUTION
SIZE A3 CODE CS DOC. NUMBER 1310A2207301-0-MT02 REV
CHANGE by Drawer_Name 6-Jun-2008
SHEET 51 OF 58

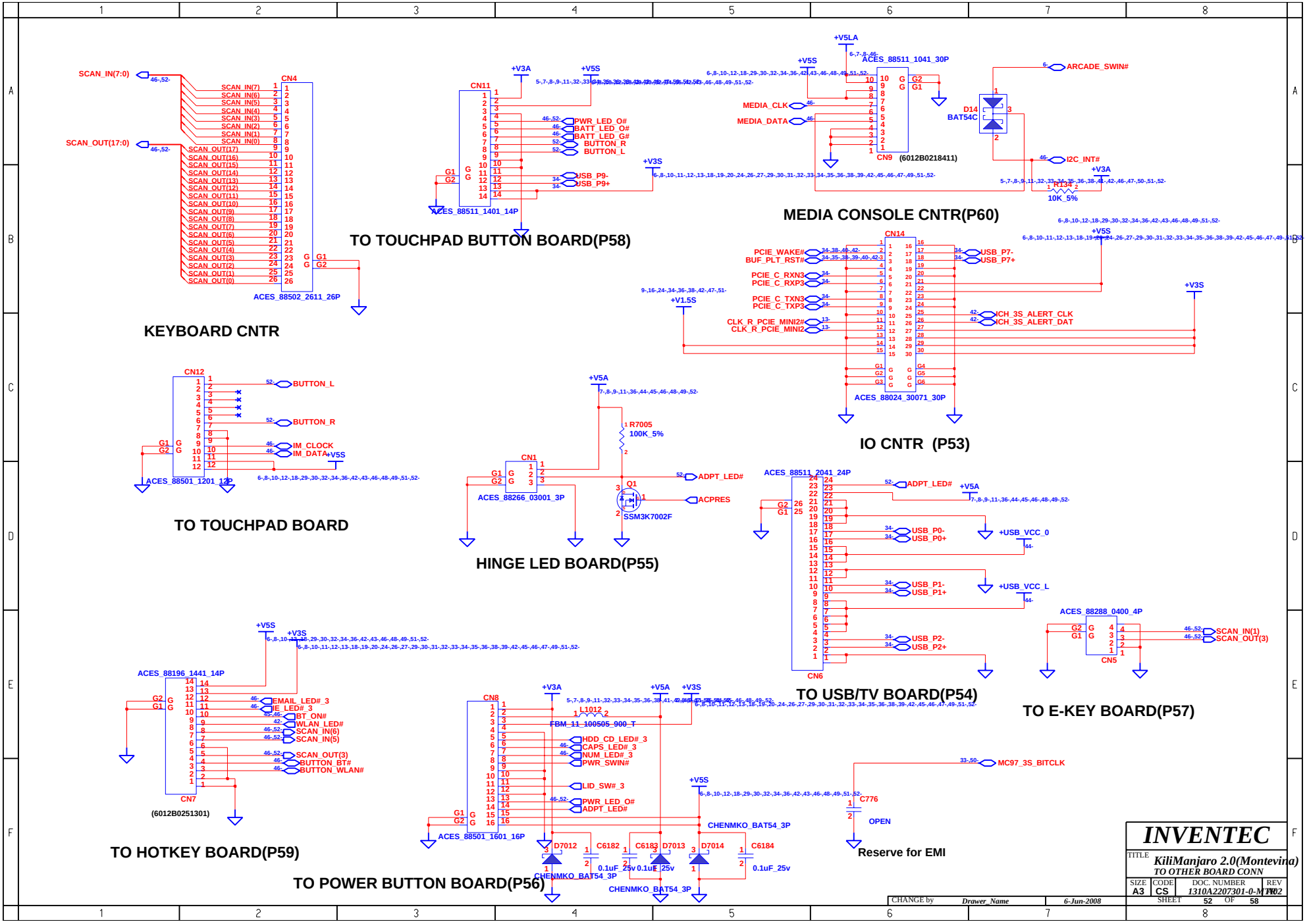

WWW.AliSaler.Com

IO BOARD

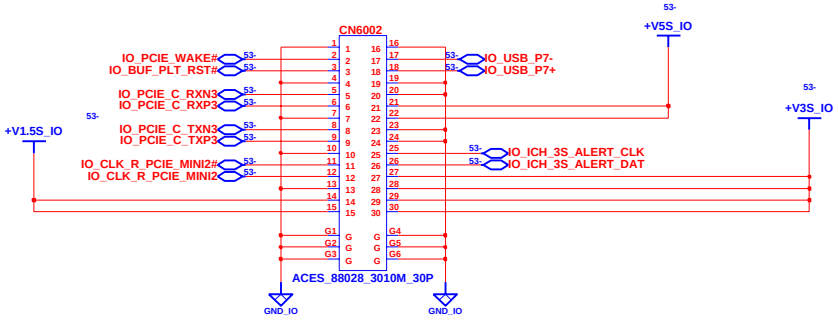

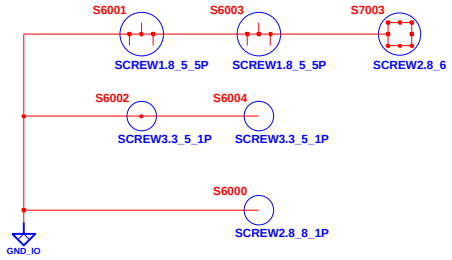

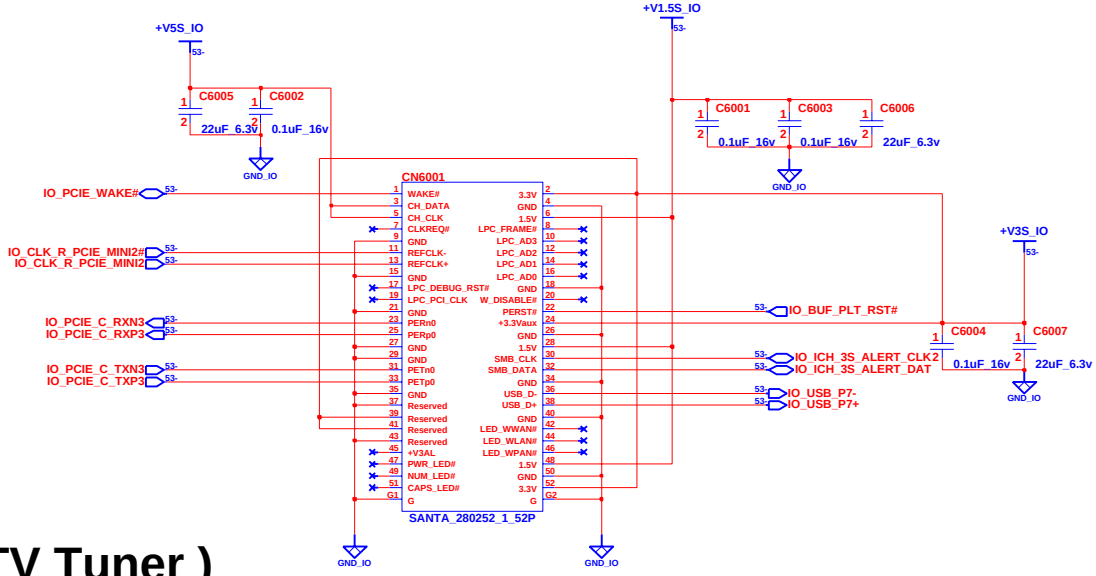

(TV Tuner)

INVENTEC			
TITLE	KiliManjaro 2.0(Montevina) MEDIA BOARD		
SIZE A3	CODE CS	DOC. NUMBER 1310A2207301-0-M1-02	REV
CHANGE by Drawer_Name	6-Jun-2008	SHEET 53 OF 58	

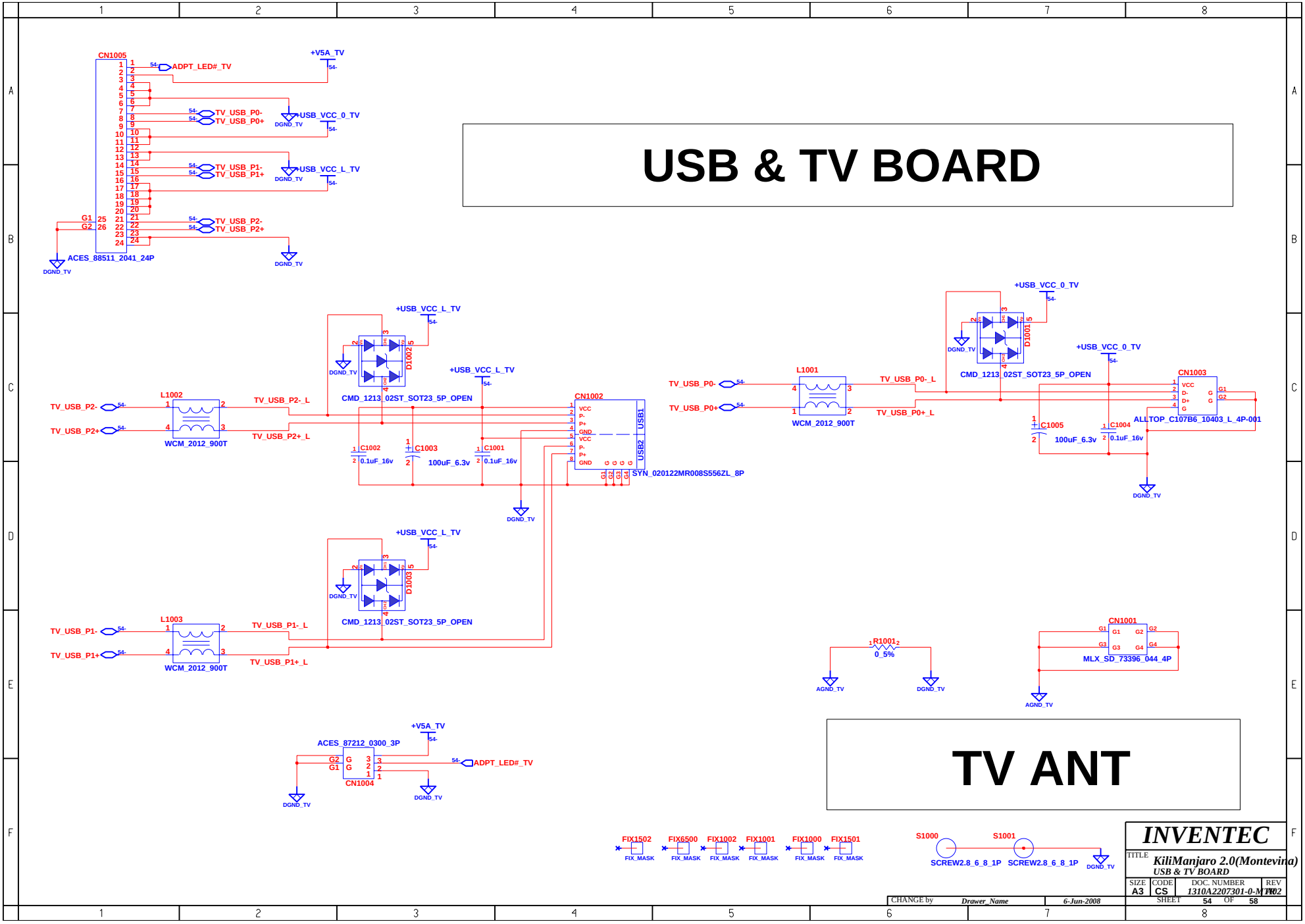

WWW.AliSaler.Com

HINGE LED Board 1

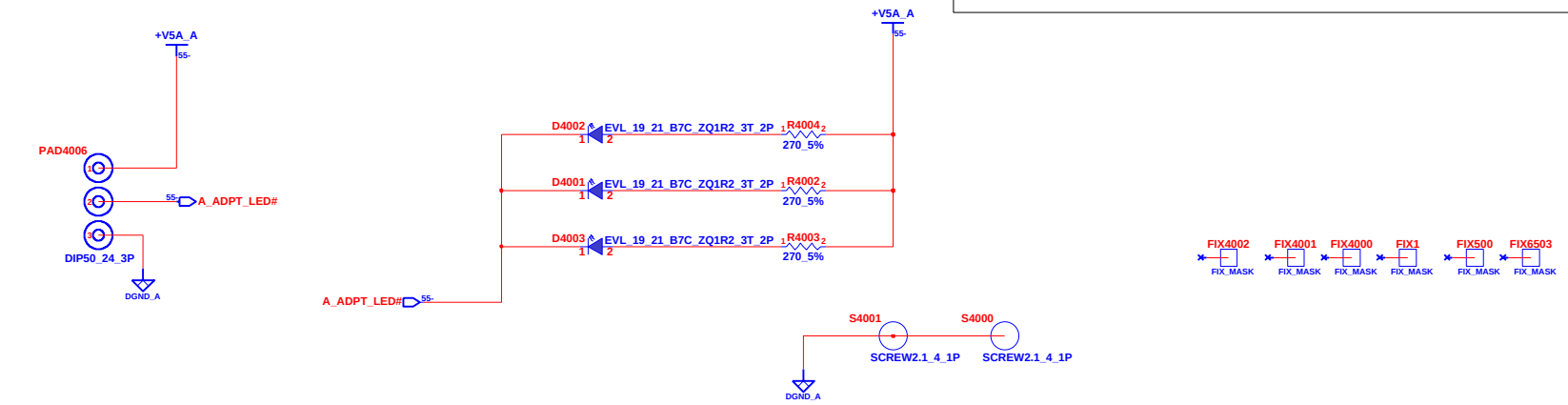

HINGE LED Board 2

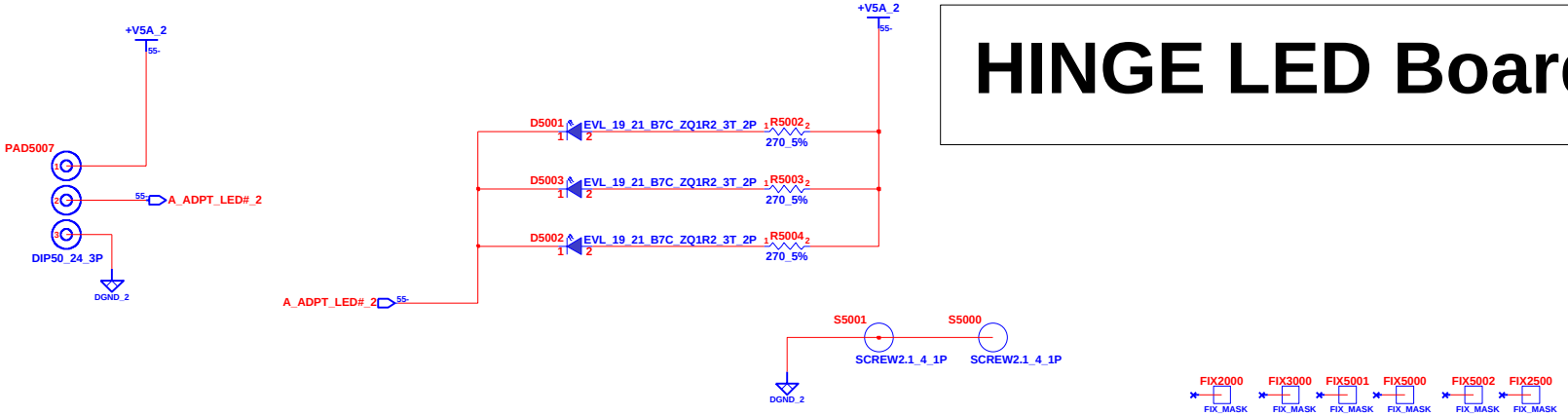

INVENTEC			
TITLE	KiliManjaro 2.0(Montevina) PowerJack BOARD		
SIZE A3	CODE CS	DOC. NUMBER 1310A2207301-0-M1H02	REV 1.02
CHANGE by Drawer_Name	6-Jun-2008	SHEET 55 OF 58	

PowerButton Board

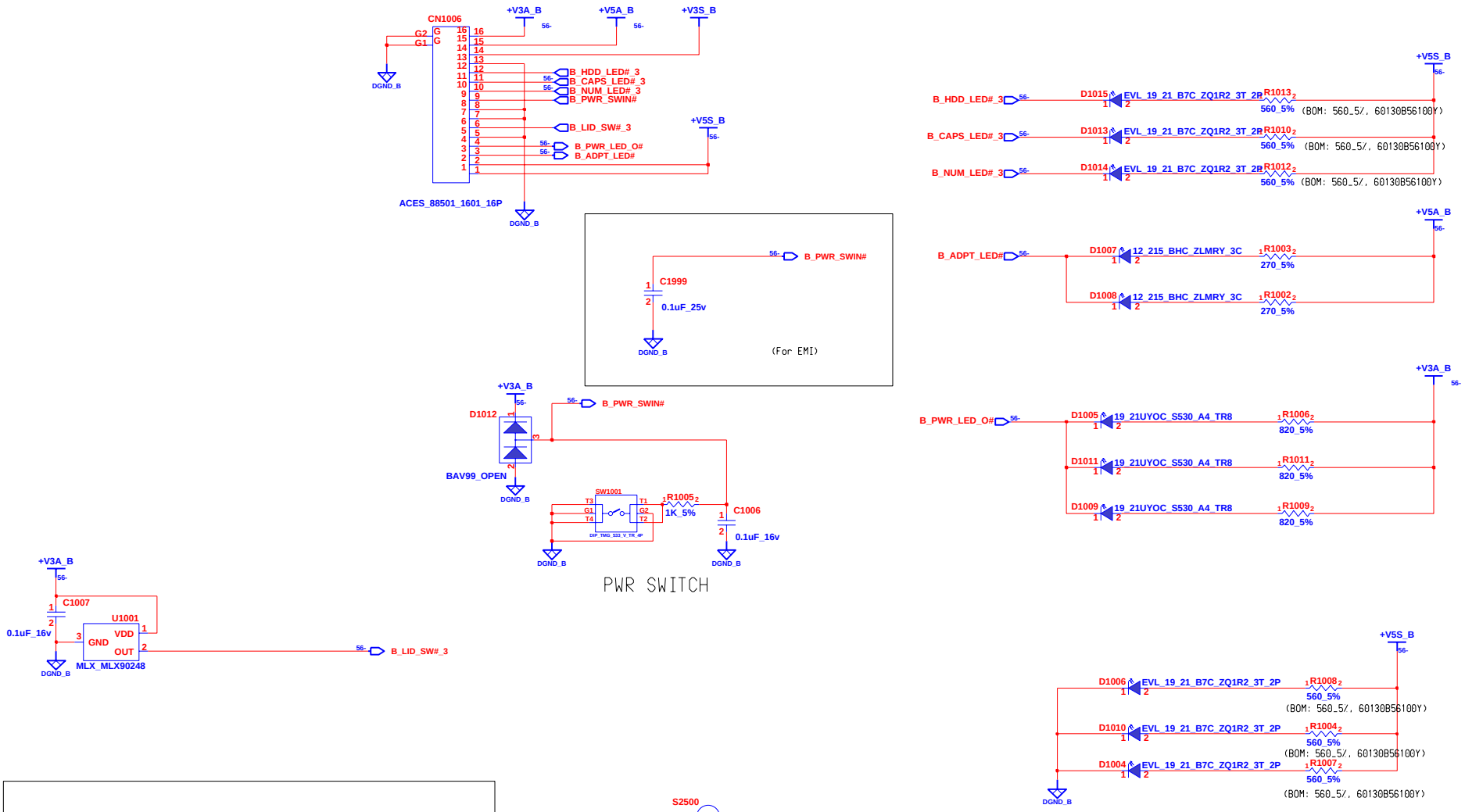

LID SWITCH

CHANGE by	Drawer_Name	6-Jun-2008	

INVENTEC

TITLE: *KiliManjaro 2.0(Montevina)*
PowerButton Board

SIZE	CODE	DOC. NUMBER	REV
A3	CS	1310A2207301-0-M1002	1A

SHEET 56 OF 58

WWW.AliSaler.Com

E-KEY Board

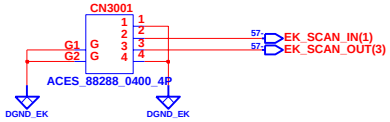

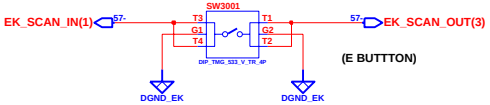

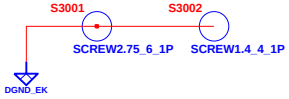

CHANGE by	Drawer_Name	6-Jun-2008	

INVENTEC

TITLE *KiliManjaro 2.0(Montevina)*
E-KEY BOARD

SIZE	CODE	DOC. NUMBER	REV
A3	CS	1310A2207301-0-M1-002	1.0

SHEET 57 OF 58

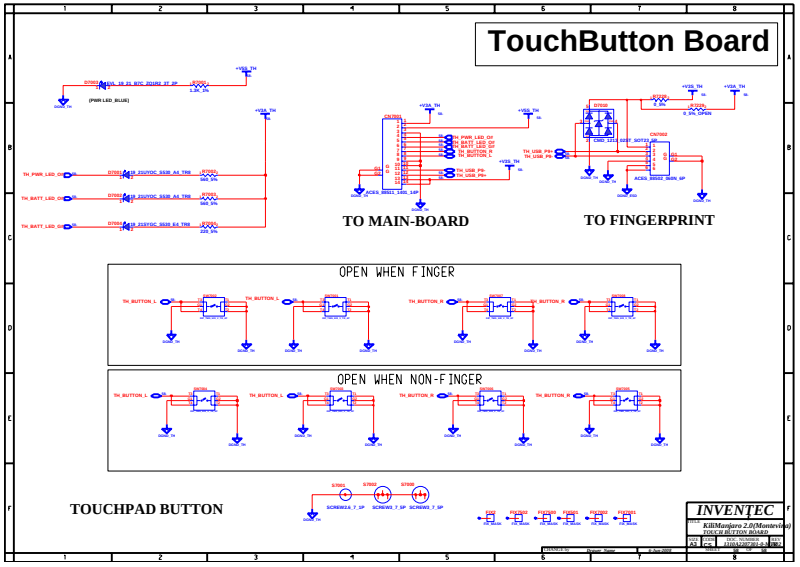

WWW.AliSaler.Com